3MP+3MP HD Indoor Dual lens PT Wi Fi Camera

Uho-S3S-M33D-U

Features

- Fixed camera and PT camera integration, dual channels with one IP, look at overall situation and consider details at the same time
- Ultra 265, H.265, H.264
- Support digital WDR (Wide Dynamic Range)
- Built-in Mic & Speaker, support two-way audio, offer better interaction
- Support sound and light warning, makes warning and alarming more noticeable
- Smart IR, up to 10m (33ft) IR and 10m (33ft) warm light distance, suitable for more scenes
- IR & warm light illumination to deal with different scenes and achieve full-color illumination
- Supports 512 GB Micro SD card
- Wi-Fi connection and easy installation

Specifications

Channel	Panorama	Detail
Camera		
Sensor	1/2.8" CMOS	
Day/Night	IR-cut filter with auto switch (ICR)	
Shutter	Auto/Manual, 1 to 1/100000 s	
S/N	> 52 dB	
WDR	DWDR	
Lens		
Digital Zoom	N/A	4X
Iris	F2.0	
Field of View (H)	91.5°	
Field of View (V)	48.1°	
Field of View (D)	96.3°	
Lens Type	Fixed	
DORI		
DORI Distance (Lens)	4.0mm	
DORI Distance (Detect)	73.5 (241.0ft)	
DORI Distance (Observe)	29.4 (96.4ft)	
DORI Distance (Recognize)	14.7 (48.2ft)	
DORI Distance (Identify)	7.3 (24.1ft)	
Illuminator		
Illumination Distance (IR)	10 m (32.8 ft.)	
Illumination Distance (Warm Light)	N/A	10 m (32.8 ft.)
Light On/Off Control	Auto/Manual	
Wavelength	850 nm	
Video		
Video Compression	Ultra 265, H.265, H.264	
Frame Rate-Main Stream	3MP (2304*1296), Max 15fps; 2MP (1920*1080), Max 15fps; 720P (1280*720), Max 15fps;	
Frame Rate-Sub Stream	640*360,Max 15fps; 2CIF(704*288), Max 15fps; CIF(352*288), Max 15fps;	
Video Bit Rate	128 Kbps to 2048 Kbps	
ROI	Up to 8 areas	
OSD	Up to 4 OSDs	
Privacy Mask	Support (only NVR)	
Video Stream	Dual streams	
Image		
White Balance	Auto, Outdoor, Fine tune, Sodium lamp, Locked, Auto2	
Digital Noise Reduction	2D/3D DNR	
Smart IR	Support	
Flip	Normal, Flip vertical, Flip horizontal, 180°	
HLC	N/A	

BLC	N/A	
Defog	Digital defog	
Events		
Basic Detection	Motion detection, Ultra motion detection (human/ vehicle/ pet), High-Decibel detection, Crying detection, Tampering alarm	
General Function	IP address filtering, Access policy, ARP protection, RTSP authentication, User authentication, HTTP authentication	
Audio		
Audio Compression	G.711U, G.711A	
Audio Bitrate	64 Kbps	
Two-way Audio	Support	
Suppression	Support	
Sampling Rate	8 kHz	
Storage		
Edge Storage	MicroSD, up to 512 GB	
Network Storage	ANR	
Network		
Wi-Fi	2.4G Wi-Fi (IEEE802.11b/g/n/ax), built-in antenna	
Protocols	IPv4, TCP, UDP, DHCP, RTSP, DNS, DDNS, NTP, HTTP	
Compatible Integration	API	
Client	APP, EZStation	
Web Browser	Plug-in required live view: IE 10+, Chrome 45+, Firefox 52+, Edge 79+	
Wi-Fi		
Wireless Standards	IEEE802.11b/g/n/ax	
Frequency Range	2.4 GHz to 2.4835 GHz	
Channel Bandwidth	20/40 MHz Support	
Modulation Mode	802.11b: CCK 802.11g/n: OFDM 802.11ax: OFDMA	
Wi-Fi Security	64/128-bit WEP, WPA-PSK/WPA2-PSK	
Transmit Power	802.11b: 17±1.5 dBm@11 Mbps802.11g: 16±1.5 dBm@54 Mbps802.11n: 16±1.5 dBm@MCS7802.11ax: 16±1.5 dBm@MCS9	
Receive Sensitivity	802.11b: -76 dBm@11 Mbps (Typical)802.11g: -65 dBm@54Mbps (Typical)802.11n: -61 dBm@MCS7, HT40 (Typical)802.11ax: -54 dBm@MCS9, HE40 (Typical)	
Transmission Rate	802.11b: 11 Mbps802.11g: 54 Mbps802.11n: up to 150 Mbps802.11ax: up to 270 Mbps	
PTZ		
Pan Range	N/A	0° ~ 355°
Pan Speed	N/A	17°/s ~ 50°/s Preset speed: 50°/s
Tilt Range	0° ~ 15°	-15° ~ 90°
Tilt Speed	N/A	17°/s ~ 50°/s Preset speed: 50°/s
Number of Presets	20	

Interface	
Built-in Mic	Support
Built-in Speaker	Support
WIFI	Support
Network	1 × RJ45 10 M/100 M Base-TX Ethernet
Video Output	N/A
Certification	
EMC	CE EMC (EN 55032, EN 61000-3-3, EN IEC 61000-3-2, EN 50130) FCC (FCC 47 CFR part15 B)
RF	FCC ID (FCC CFR 47 part15 C) CE RED (EN 301 489-1, EN 301 489-17, EN 300 328, EN 62311)
Safety	CE LVD (EN 62368-1)
Environment	CE-RoHS (2011/65/EU; (EU) 2015/863) ; WEEE (2012/19/EU)
General	
Power Consumption	MAX 7.5W
Power	DC 5V/1.5A USB type-C interface
Dimensions	Φ83 x 127mm (Ø3.3” x 4.8”)
Weight	0.22kg (0.49lb)
Working Environment	-10 ℃ to 50 ℃ (14 ℉ to 122 ℉), Humidity: ≤ 95% RH (non-condensing)
Storage Environment	-10 ℃ to 50 ℃ (14 ℉ to 122 ℉), Humidity: ≤ 95% RH (non-condensing)
Surge Protection	4 KV
Reset Button	Support
LED Indicator	1, red/blue
RTC	Support

Dimensions

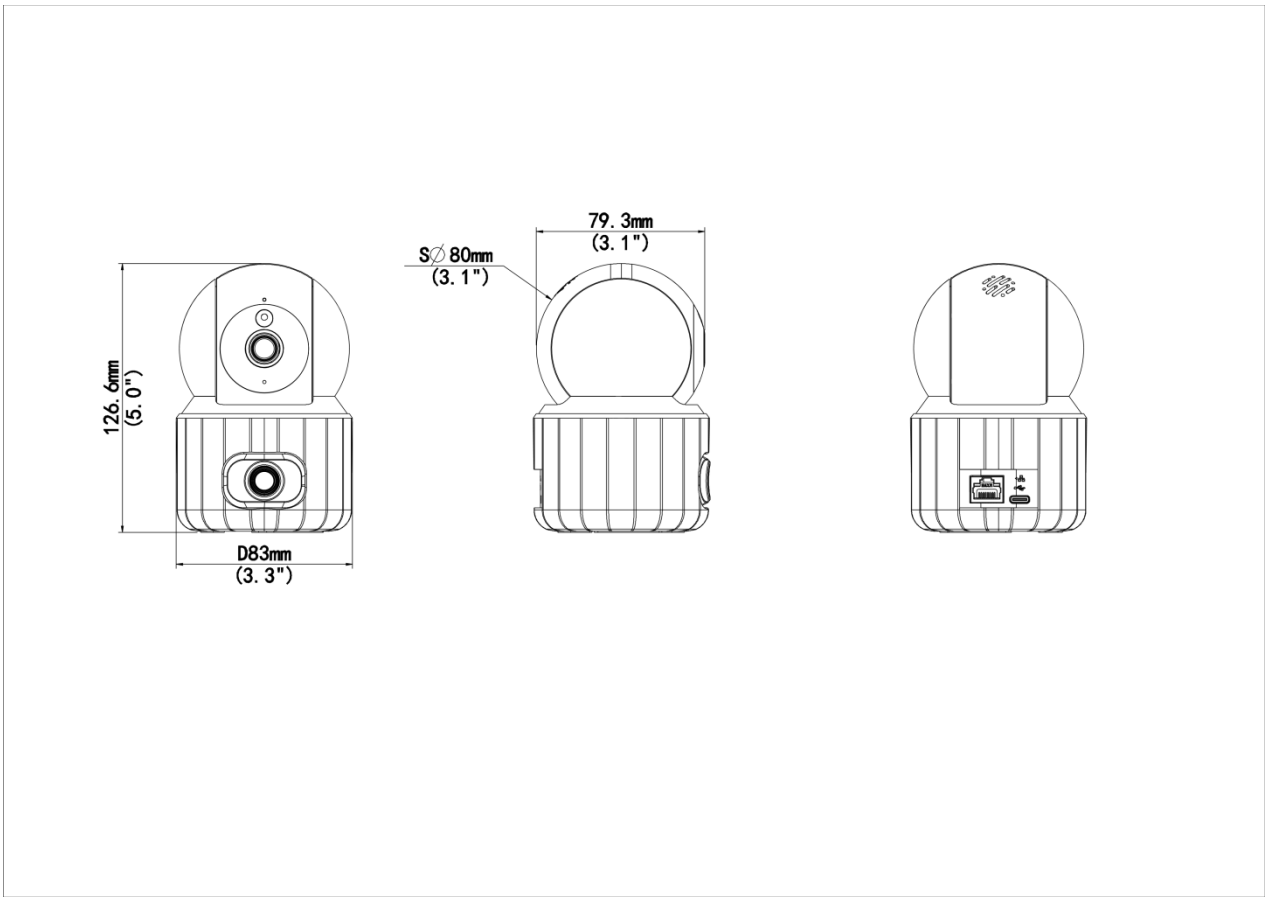

Accessories

TR-WM05-A Indoor Camera PTZ Wall Mount Bracket		

Unlimited New View

Zhejiang Uniview Technologies Co., Ltd.

http://www.uniview.com

overseasbusiness@uniview.com; globalsupport@uniview.com

No. 369, Xietong Road, Xixing Sub-district, Binjiang District, Hangzhou City, 310051, Zhejiang Province, China

©2026 Zhejiang Uniview Technologies Co., Ltd. All rights reserved.

*Product specifications and availability are subject to change without notice.

Despite our best efforts, technical or typographical errors may exist in this document. Uniview cannot be held responsible for any such errors and reserves the right to change the contents of this document without prior notice.