# 4MP HD Intelligent ColorHunter Fixed Eyeball Network Camera

# IPC3634SE-ADF28(40)K-WL-I0

## Features

- High quality image with 4 MP, 1/1.8" CMOS sensor
- 4 MP (2688 × 1520)@30/25 fps; 4 MP (2560 × 1440)@30/25 fps; 3 MP (2304 × 1296)@30/25 fps; 1080P (1920 × 1080)@30/25 fps; 720P (1280 × 720), max. 30/25 fps
- Ultra 265, H.265, H.264, MJPEG
- Smart intrusion prevention, including cross line, intrusion, enter area, leave area detection
- Based on target classification, smart intrusion prevention significantly reduces false alarm caused by leaves, birds and lights, accurately focusing on human, motor vehicle and non-motor vehicle
- Intelligent people flow counting and crowd density monitoring
- ColorHunter technology ensures 24-hour full-color images
- F1.0 super aperture
- 120 dB true WDR technology enables clear image in strong light scene
- Supports 9:16 corridor mode
- Alarm I/O: 1/1, audio I/O: 1/1
- MicroSD, up to 1 TB
- IK10 vandal resistant and IP67 protection

# Specifications

| Model | IPC3634SE-ADF28K-WL-I0 | IPC3634SE-ADF40K-WL-I0 |
|---|---|---|
| Camera | | |
| Max Resolution | 4 MP | |
| Sensor | 1/1.8" CMOS | |
| Min. Illumination | Color: 0.0005 Lux (F1.0, AGC ON) | |
| Shutter | Auto/Manual, 1 ~ 1/100000s | |
| Adjustment Angle | Pan: 0° to 360°, Tilt: 0° to 75°, Rotate: 0° to 360° | |
| S/N | >56 dB | |
| WDR | 120 dB | |
| Lens | | |
| Focal Length | 2.8 mm | 4.0 mm |
| Iris Type | Fixed | |
| Iris | F1.0 | |
| Field of View (H) | 110.4° | 88.2° |
| Field of View (V) | 60.5° | 47.6° |
| Field of View (D) | 115.2° | 104.0° |
| DORI | | |
| DORI Distance (Lens) | 2.8 mm | 4 mm |
| DORI Distance (Detect) | 43.4 m (142.4 ft.) | 62.1 m (203.7 ft.) |
| DORI Distance (Observe) | 17.4 m (57.1 ft.) | 24.8 m (81.4 ft.) |
| DORI Distance (Recognize) | 8.7 m (28.5 ft.) | 12.4 m (40.7 ft.) |
| DORI Distance (Identify) | 4.3 m (14.1 ft.) | 6.2 m (20.3 ft.) |
| Illuminator | | |
| Supplemental Light | Warm light | |
| Illumination Distance (Warm Light) | 30 m (98.4 ft.) | |
| Light On/Off Control | Auto/Manual | |
| Video | | |
| Video Compression | Ultra 265, H.265, H.264, MJPEG | |
| H.264 Code Profile | Baseline profile, Main profile, High profile | |
| Frame Rate | Main Stream: 4 MP (2688 × 1520), max. 30 fps; 4 MP (2560 × 1440), max. 30 fps; 3 MP (2304 × 1296), max. 30 fps; 1080P (1920 × 1080), max. 30 fps; 720P (1280 × 720), max. 30 fps;<br>Sub Stream: 720P (1280 × 720), max. 30 fps; D1 (720 × 576), max. 30 fps; 640 × 360, max. 30 fps;<br>Third Stream: D1 (720 × 576), max. 30 fps; 640 × 360, max. 30 fps; 2CIF (704 × 288), max. 30 fps; CIF (352 × 288), max. 30 fps; | |
| Video Bit Rate | 128 Kbps to 16 Mbps | |
| U-code | Support | |
| OSD | Up to 8 OSDs | |
| Privacy Mask | Up to 4 areas | |
| ROI | Support | |
| Video Stream | Triple streams | |

| | |
|---|---|
| Image | |
| Smart Illumination | Support |
| White Balance | Auto, Outdoor, Fine Tune, Sodium Lamp, Locked, Auto2 |
| Digital Noise Reduction | 2D/3D DNR |
| Flip | Normal, Flip Vertical, Flip Horizontal, 180°, 90°Clockwise, 90°Anti-clockwise |
| Dewarping | N/A |
| HLC | Support |
| BLC | Support |
| Defog | Digital defog |
| Intelligent | |
| Smart Intrusion Prevention | Cross line detection, intrusion detection, enter area detection, leave area detection (support false alarm filtering and the classification of human, non-motor vehicle and vehicle) |
| Statistical Analysis | N/A |
| People Counting | Support people flow counting and crowd density detection |
| Events | |
| Basic Detection | Motion detection, Ultra motion detection, Tampering alarm, Audio detection |
| General Function | Watermark, IP address filtering, Access policy, ARP protection, RTSP authentication, User authentication, HTTP authentication, Alarm input, Alarm output |
| Audio | |
| Audio Compression | G.711U, G.711A, AAC-LC |
| Audio Bitrate | G.711U/G.711A: 64 kbps, AAC-LC: 128 kbps |
| Two-way Audio | Support |
| Suppression | Support |
| Sampling Rate | G.711U/G.711A: 8 kHz, AAC-LC: 8 kHz, 16 kHz, 48 kHz |
| Storage | |
| Edge Storage | MicroSD, up to 1 TB |
| Network Storage | ANR, NAS (NFS) |
| Network | |
| Protocols | IPv4, IPv6, IGMP, ICMP, ARP, TCP, UDP, DHCP, PPPoE, RTP, RTSP, RTCP, RTMP, DNS, DDNS, NTP, FTP, UPnP, HTTP, HTTPS, SMTP, 802.1x, SNMP, QoS, SSL/TLS, SSH |
| Compatible Integration | ONVIF (Profile S, Profile G, Profile T, Profile M), API, SDK |
| User/Host | Up to 32 users, 2 user levels: administrator and common user |
| Security | Password Protection, Strong Password, HTTPS Encryption, Export Operation Logs, Basic and Digest Authentication for RTSP, Digest Authentication for HTTP, TLS 1.2, WSSE and Digest Authentication for ONVIF |
| Client | EZStation, APP |
| Web Browser | Plug-in required live view: IE 10+, Chrome 45+, Firefox 52+, Edge 79+, Plug-in free live view: Chrome 57+, Firefox 58+, Edge 16+ |
| Interface | |
| Audio I/O | 1 Input: impedance 35 kΩ, amplitude 2 V [p-p], 1 Output: impedance 600 Ω, amplitude 2 V [p-p] |
| Alarm I/O | 1/1 |
| Serial Port | N/A |
| Built-in Mic | Support |

| | |
|---|---|
| Built-in Speaker | N/A |
| WIFI | N/A |
| Network | 1 × RJ45 10 M/100 M Base-TX Ethernet |
| Video Output | N/A |
| Certification | |
| EMC | CE-EMC (EN 55032: 2015+A1:2020,EN 61000-3-3: 2013+A1: 2019,EN IEC 61000-3-2: 2019+A1: 2021,EN 55035: 2017+A11:2020)<br>FCC (FCC CFR 47 part15 B, ANSI C63.4-2014) |
| Safety | CE LVD (EN 62368-1:2014+A11:2017)<br>CB (IEC 62368-1:2014)<br>UL (UL 62368-1, 2nd Ed., Issue Date: 2014-12-01) |
| Environment | CE-RoHS (2011/65/EU;(EU)2015/863); WEEE (2012/19/EU); Reach (Regulation (EC) No 1907/2006) |
| Protection | IP67 (IEC 60529:1989+AMD1:1999+AMD2:2013)<br>IK10 (IEC 62262:2002) |
| General | |
| Power | DC 12 V±25%, PoE (IEEE 802.3af) |
| Power Consumption | Max. 9.0 W |
| Power Interface | Ø5.5 mm coaxial power plug |
| Dimensions | Ø129 mm × 110 mm (Ø5.1" × 4.3") (Ø × H) |
| Weight | 0.69 kg (1.52 lb.) |
| Material | Metal |
| Working Environment | -30 ℃ to 60 ℃ (-22 ℉ to 140 ℉), Humidity: ≤ 95% RH (non-condensing) |
| Storage Environment | -30 ℃ to 60 ℃ (-22 ℉ to 140 ℉), Humidity: ≤ 95% RH (non-condensing) |
| Surge Protection | 4 KV |
| Reset Button | Support |
| Web Client Language | 20 Languages: Traditional Chinese, English, Simplified Chinese, Polish, German, Russian, French, Korean, Dutch, Czech, Portuguese (Europe), Portuguese (Brazil), Japanese, Thai, Turkish, Spanish (Latin America), Spanish (Europe), Hungarian, Italian, Vietnamese |

# Dimensions

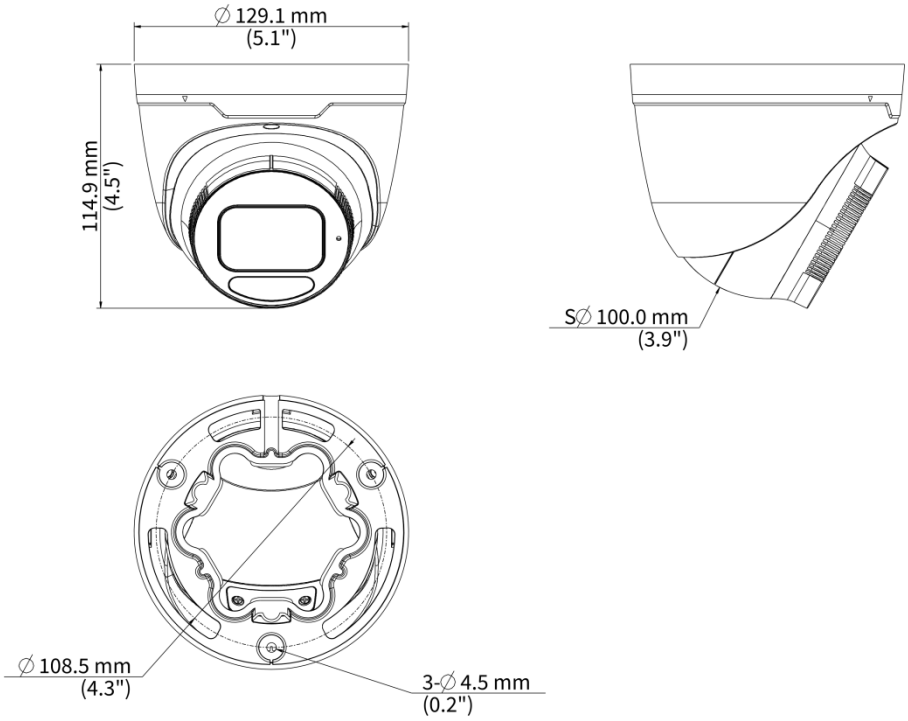


# Accessories

| TR-JB03-H-IN-V2<br>Turret Junction Box(Support Wiring From Behind) | TR-A01-IN<br>NPT 3/4'' Waterproof Cable Gland | TR-SE24-IN<br>Dome Pendent Mounting Pole 200mm |
|---|---|---|
| | | |
| **TR-SE24-A-IN**<br>Dome Pendent Mounting Pole 500mm | **TR-CM24-IN**<br>Dome Pendent Mounting Bracket(Indoor) | **TR-UC08-C-V2**<br>Bullet&Dome Corner Mounting Bracket |
|  | | |

| | | |
|---|---|---|
| **TR-JB07/WM03-F-IN-V2**<br>Wall Mounting Assembling Bracket with Back Hole For 3 Inches Dome | **TR-WM03-B-IN-V2**<br>3 Inches Dome Wall Mounting Assembling Bracket | **TR-UP06-C-IN-V2**<br>Pole Mounting Bracket For Bullet Junction Box Only |
| | | |
| **TR-JB03-J-IN**<br>VF Turret Junction Box(Support Wiring From Behind) | | |
| | | |

# Unlimited New View

**Zhejiang Uniview Technologies Co., Ltd.**

http://www.uniview.com

overseasbusiness@uniview.com; globalsupport@uniview.com

No. 369, Xietong Road, Xixing Sub-district, Binjiang District, Hangzhou City, 310051, Zhejiang Province, China

©2023-2026 Zhejiang Uniview Technologies Co., Ltd. All rights reserved.

*Product specifications and availability are subject to change without notice.

Despite our best efforts, technical or typographical errors may exist in this document. Uniview cannot be held responsible for any such errors and reserves the right to change the contents of this document without prior notice.