Wall Mounted Card Reader

OEC-R3H-ME



소개

OEC R3H ME wall mounted card reader is a contactless card reader. It features high receiving sensitivity and low working current, applicable to scenarios such as access control, attendance, etc.

주요 특징

- Supports Wiegand/RS 485 data output.
- Built in buzzer.
- Supports indoor and outdoor application.
- Stability, sensitivity, and responsiveness.
- Supports ISO 14443 A and ISO 14443 B protocols.

사양

Model	OEC-R3H-ME
Hardware Specification	
Operating Frequency	13.56 MHz, 125 KHz
Interface	1 x Wiegand (supports 26/34 DIP switch selection, default Off is 34, On is 26), 1 x RS485
Dimensions (L x W x H)	128.8 x 88 x 25 mm
Weight	132g
Mount Method	115 x 73 mm junction box (120 box), 86 x 86mm junction box
Operating Temperature	-30°C to 65°C
Operating Humidity	10% to 90%
Storage Temperature	-40°C to 65°C
Indicator	Steady blue: Normal operation;
Power Consumption	1.0W
Operating Voltage	DC 12V ± 25%
Operating Current	81mA
Reading Distance	EM card: max.3cm Large IC card: max. 3cm Small IC card: max. 1cm
Authentication Mode	Card
Protection Level	IP65
Mifare Card Control	Configure card reading (sector number, block number, sector offset, length, access key) information via 485
DIP Switch	8-bit Bit 1-4: 485 address bits (default 0000; 0 is Off, 1 is On). Bit 5: Mode switch (Off for Wiegand, On for 485). Bit 6: Wiegand protocol (default Off for Wiegand 34, On for Wiegand 26). Bit 7: Termination resistor (default Off for disabled, On for enabled). Enable when 485 line distance is long or interference is strong. Bit 8: Reserved.
Upgrade	Supports software upgrade via 485 interface
Tamper Alarm	Support, continuous rapid "beep" alarm
Physical	
Material	Rigid PC
Basic Business	
Reading Time	< 1s
Card Type	EM card, Mifare card

크기

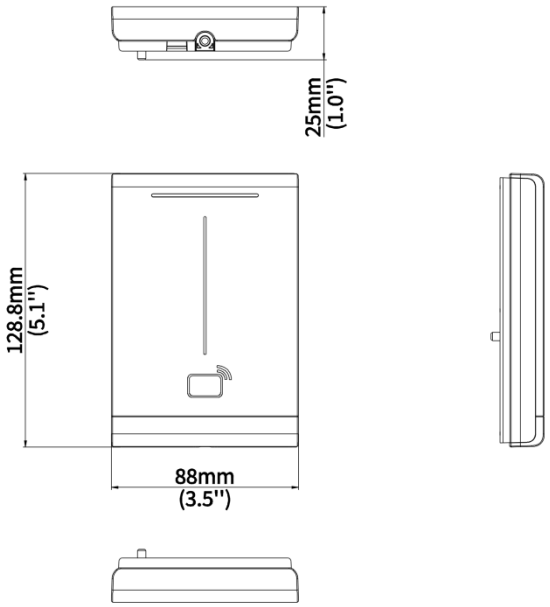

Unlimited New View

Zhejiang Uniview Technologies Co., Ltd.

http://www.uniview.com

overseasbusiness@uniview.com; globalsupport@uniview.com

No. 369, Xietong Road, Xixing Sub-district, Binjiang District, Hangzhou City, 310051, Zhejiang Province, China

©2023-2025 Zhejiang Uniview Technologies Co., Ltd. All rights reserved.
*Product specifications and availability are subject to change without notice.
© 2022 Zhejiang Uniview Technologies Co., Ltd. 무단 전재 및 재배포 금지. *제품 사양 및 재고는 사전 예고 없이 변경될 수 있습니다.