4MP HD Intelligent LightHunter IR Fixed Mini Dome Camera

IPC314SB-ADF28K-I0

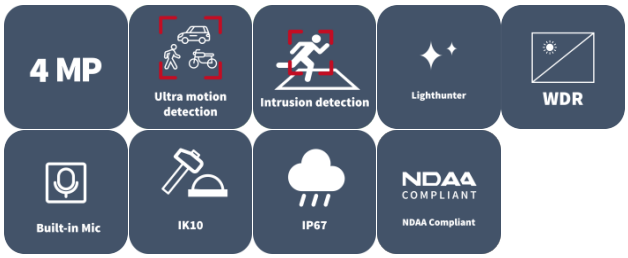

Features

- High quality image with 4 MP, 1/3.0" CMOS sensor
- 4 MP (2688 × 1520)@30/25 fps; 4 MP (2560 × 1440)@30/25 fps; 3 MP (2304 × 1296)@30/25 fps; 1080P (1920 × 1080)@30/25 fps
- Ultra 265, H.265, H.264, MJPEG
- Smart intrusion prevention, including cross line, intrusion, enter area, leave area detection
- Intelligent intrusion prevention system based on target classification significantly reduces false alarms caused by leaves, birds, and lights, accurately focusing on humans, vehicles, and non-motor vehicles
- LightHunter technology ensures ultra-high image quality in low illumination environment
- 120 dB true WDR technology enables clear image in strong light scene
- Supports 9:16 corridor mode
- Built-in mic
- Smart IR, up to 30 m (98.4 ft) IR distance
- MicroSD, up to 1 TB
- IK10 vandal resistant
- IP67 protection
- Supports PoE power supply
- 3-axis

Specifications

Model	IPC314SB-ADF28K-I0
Camera	
Max Resolution	4 MP
Sensor	1/3.0" CMOS
Min. Illumination	Color: 0.002 Lux (F1.6, AGC ON), 0 Lux with IR
Day/Night	IR-cut filter with auto switch (ICR)
Shutter	Auto/Manual, 1 ~ 1/100000s
Adjustment Angle	Pan: 0° to 90°, Tilt: 0° to 68°, Rotate: 0° to 360°
S/N	>52 dB
WDR	120 dB
Lens	
Focal Length	2.8 mm
Iris Type	Fixed
Iris	F1.6
Field of View (H)	101.1°
Field of View (V)	55.3°
Field of View (D)	111.1°
Lens Type	Fixed
DORI	
DORI Distance (Lens)	2.8 mm
DORI Distance (Detect)	63.0 m (206.7 ft.)
DORI Distance (Observe)	25.2 m (82.7 ft.)
DORI Distance (Recognize)	12.6 m (41.3 ft.)
DORI Distance (Identify)	6.3 m (20.7 ft.)
Illuminator	
Supplemental Light	IR
Illumination Distance (IR)	30 m (98.4 ft.)
Wavelength	850 nm
Light On/Off Control	Auto/Manual
Video	
Video Compression	Ultra 265, H.265, H.264, MJPEG
H.264 Code Profile	Baseline profile, Main profile, High profile
Frame Rate	Main Stream: 4 MP (2688 × 1520), max. 30 fps; 4 MP (2560 × 1440), max. 30 fps; 3 MP (2304 × 1296), max. 30 fps; 1080P (1920 × 1080), max. 30 fps; Sub Stream: 720P (1280 × 720), max. 30 fps; D1 (720 × 576), max. 30 fps; 640 × 360, max. 30 fps; Third Stream: D1 (720 × 576), max. 30 fps; 640 × 360, max. 30 fps; 2CIF (704 × 288), max. 30 fps; CIF (352 × 288), max. 30 fps;
Video Bit Rate	128 Kbps to 16 Mbps
U-code	Support
OSD	Up to 8 OSDs
Privacy Mask	Up to 4 areas

ROI	Support
Video Stream	Triple streams
Image	
White Balance	Auto, Outdoor, Fine tune, Sodium lamp, Locked, Auto2
Smart IR	Support
Digital Noise Reduction	2D/3D DNR
Flip	Normal, Flip vertical, Flip horizontal, 180°, 90° Clockwise, 90° Anti-clockwise
Dewarping	N/A
HLC	N/A
BLC	Support
Defog	Digital defog
Intelligent	
Smart Intrusion Prevention	Cross line detection, intrusion detection, enter area detection, leave area detection (support false alarm filtering and the classification of human, non-motor vehicle and vehicle)
Statistical Analysis	N/A
People Counting	Support people flow counting and crowd density detection
Events	
Basic Detection	Motion detection, Ultra motion detection, Tampering alarm, Audio detection
General Function	Watermark, IP address filtering, Access policy, ARP protection, RTSP authentication, User authentication, HTTP authentication
Audio	
Audio Compression	G.711U, G.711A, AAC-LC
Audio Bitrate	G.711U/G.711A: 64 kbps, AAC-LC: 128 kbps
Two-way Audio	Support
Suppression	Support
Sampling Rate	G.711U/G.711A: 8 kHz, AAC-LC: 8 kHz, 16 kHz, 48 kHz
Storage	
Edge Storage	MicroSD, up to 1 TB
Network Storage	ANR, NAS (NFS)
Network	
Protocols	IPv4, IPv6, IGMP, ICMP, ARP, TCP, UDP, DHCP, PPPoE, RTP, RTSP, RTCP, DNS, DDNS, NTP, FTP, UPnP, HTTP, HTTPS, SMTP, 802.1x, SNMP, QoS, RTMP, SSH, SSL/TLS
Compatible Integration	ONVIF (Profile S, Profile G, Profile T, Profile M), API, SDK
User/Host	Up to 32 users. 3 user levels: administrator, common user and operator
Security	Password Protection, Strong Password, HTTPS Encryption, Export Operation Logs, Basic and Digest Authentication for RTSP, Digest Authentication for HTTP, TLS 1.2, WSSE and Digest Authentication for ONVIF
Client	EZStation, APP
Web Browser	Plug-in required live view: IE 10+, Chrome 45+, Firefox 52+, Edge 79+, Plug-in free live view: Chrome 57+, Firefox 58+, Edge 16+
Interface	
Audio I/O	1 Input: impedance 35 kΩ, amplitude 2 V [p-p], 1 Output: impedance 600 Ω, amplitude 2 V [p-p]
Alarm I/O	N/A

Serial Port	N/A
Built-in Mic	Support
Built-in Speaker	N/A
WIFI	N/A
Network	1 × RJ45 10 M/100 M Base-TX Ethernet
Video Output	N/A
Certification	
EMC	CE-EMC (EN 55032, EN 61000-3-3, EN IEC 61000-3-2, EN 55035) FCC (FCC 47 CFR part15 B)
Safety	CE LVD (EN 62368-1) CB (IEC 62368-1) UL/CUL (UL 62368-1, CAN/CSA C22.2 No. 62368-1)
Environment	CE-RoHS (2011/65/EU;(EU)2015/863); WEEE (2012/19/EU);
Protection	IP67 (IEC 60529) IK10 (IEC 62262)
General	
Power	DC 12 V±25%, PoE (IEEE 802.3af)
Power Consumption	Max. 6.0 W
Power Interface	Ø5.5 mm coaxial power plug
Dimensions	Ø110 mm × 61 mm (Ø4.3" × 2.4") (Ø × H)
Weight	0.37 kg (0.82 lb.)
Material	Metal
Working Environment	-30 ℃ to 60 ℃ (-22 ℉ to 140 ℉), Humidity: ≤ 95% RH (non-condensing)
Storage Environment	-30 ℃ to 60 ℃ (-22 ℉ to 140 ℉), Humidity: ≤ 95% RH (non-condensing)
Surge Protection	4 KV
Reset Button	N/A
Web Client Language	20 Languages: Traditional Chinese, English, Simplified Chinese, Polish, German, Russian, French, Korean, Dutch, Czech, Portuguese (Europe), Portuguese (Brazil), Japanese, Thai, Turkish, Spanish (Latin America), Spanish (Europe), Hungarian, Italian, Vietnamese

Dimensions

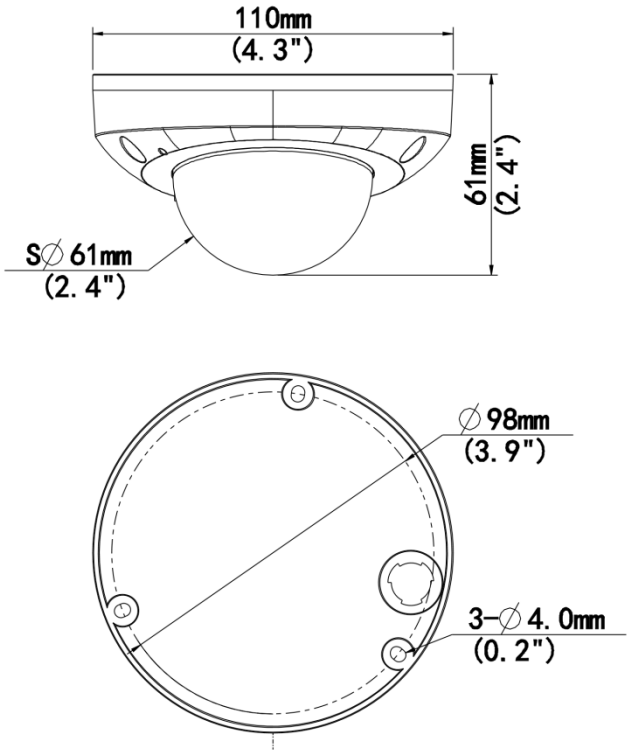

Accessories

TR-JB03-G-IN	TR-UM06-E-IN	TR-A01-IN
Mini Dome Junction Box(Support Wiring From Behind)	Slant Mounting Bracket For Fixed Dome	NPT 3/4'' Waterproof Cable Gland
TR-SE24-IN	**TR-SE24-A-IN**	**TR-CM24-IN**
Dome Pendent Mounting Pole 200mm	Dome Pendent Mounting Pole 500mm	Dome Pendent Mounting Bracket(Indoor)

TR-JB07/WM03-G-IN-V2 Wall Mounting Assembling Bracket For Dome&Mini Dome&Plastic Turret Camera	**TR-WM03-D-IN-V2** Wall Mounting Bracket For Dome&Mini Dome&Plastic Turret Camera	**TR-UC08-C-V2** Bullet&Dome Corner Mounting Bracket
TR-UP06-C-IN-V2 Pole Mounting Bracket For Bullet Junction Box Only		

Unlimited New View

Zhejiang Uniview Technologies Co., Ltd.

http://www.uniview.com

overseasbusiness@uniview.com; globalsupport@uniview.com

No. 369, Xietong Road, Xixing Sub-district, Binjiang District, Hangzhou City, 310051, Zhejiang Province, China

©2023-2026 Zhejiang Uniview Technologies Co., Ltd. All rights reserved.

*Product specifications and availability are subject to change without notice.

Despite our best efforts, technical or typographical errors may exist in this document. Uniview cannot be held responsible for any such errors and reserves the right to change the contents of this document without prior notice.