Swing Barrier
Quick Guide

V1.06

Contents

1 Packing List

No.	Name	Qty	Unit
1	Swing barrier	1	Set
2	L-key	2	PCS
3	Network cable	2	PCS
4	Power cable	2	PCS
5	M12*100 expansion bolt	4	PCS/pedestal
6	Signal extension cable	3	PCS
7	Power adapter extension cable	3	PCS
8	User manual	1	PCS

NOTE!

- The L-key and user manual are shipped with the right pedestal.
- The M12*100 expansion bolts are only suitable for concrete floors. For other types of floors, you need to prepare the matching expansion bolts. The length of the expansion bolt should not be less than 120mm, 150mm is recommended.
- The delivered accessories are stored in a box attached to the pedestal as shown below.

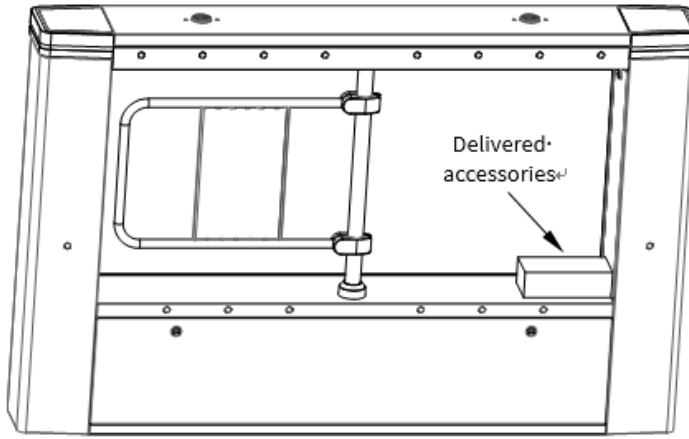

2 Overview

This product is designed for intelligent recognition access control. It can work with intelligent recognition terminals to perfectly integrate intelligent recognition technology into barrier gates to achieve precise access control and resolve issues plaguing traditional barrier gates such as illegal access using credentials of authorized persons. It supports multiple door opening modes such as authentication (QR code, IC card, ID card), induction, and normally open. As a professional device, this product is made of austenitic stainless steel; has a simple and elegant design; adopts advanced controller production technology to ensure long-term stable operation; and can be widely used in various industries.

2.1 Dimensions

Front View

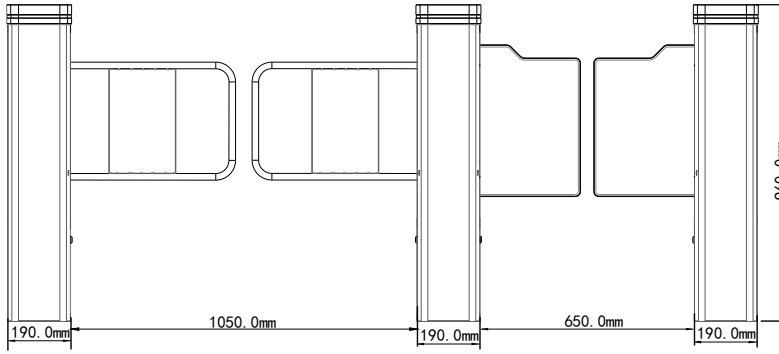

Top View

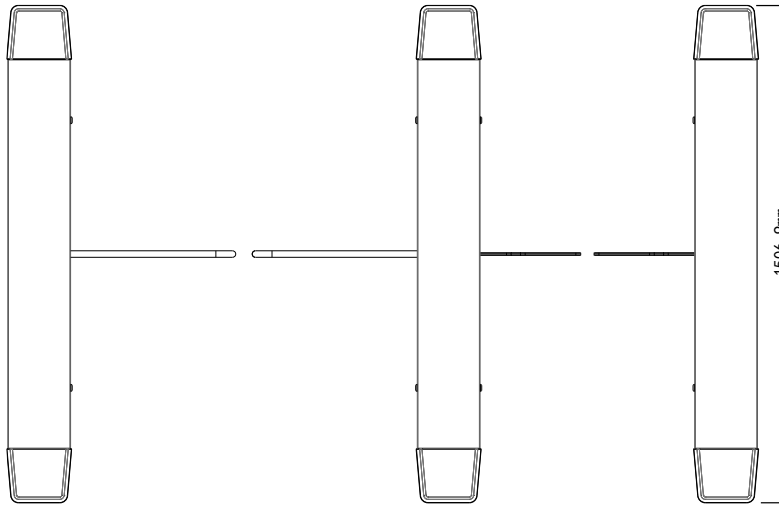

2.2 Structure

The lane system is composed of mechanical system and electrical control system, and includes two major parts: pedestals and controllers. The pedestal is used as a carrier on which card readers, direction indicators, alarm devices, light curtain sensors, door locks, etc. are installed. The controller consists of servo motor, rack, drive shaft, barrier, etc.

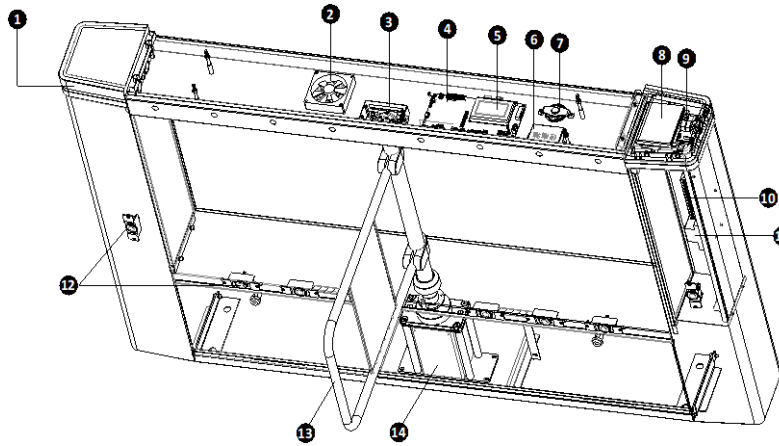

1. Indicator	2. Fan
3. Light interrupt evaluation board	4. Control board
5. Display screen	6. Supercapacitor board
7. Loudspeaker	8. Card reader
9. Remote receiver (hereinafter referred to as “receiver”)	10. Standby power
11. Air circuit breaker	12. IR sending/receiving
13. Stainless steel barrier	14. Motor

2.3 In/Out Direction Description

You can distinguish the left, right and middle pedestals by the labels attached to the outer packaging of the product.

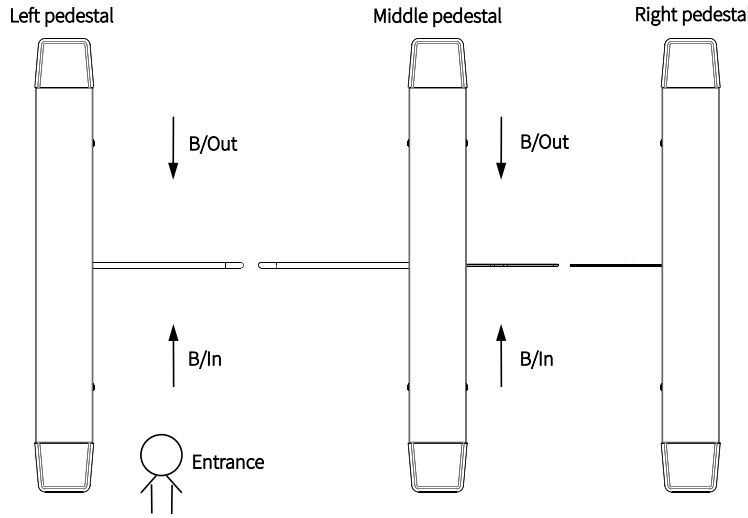

NOTE!

The in/out direction may vary depending on the on-site wiring.

3 Installation

3.1 Prepare Installation Tools

- ESD wrist strap or gloves
- Marker
- Electronics precision repair kit
- Tape measure
- Electric drill
- Hammer
- Cutter
- Several network cables

3.2 Locate Pedestals

Prepare the installation tools mentioned above, check against the packing list to ensure all components are complete, and make sure the device is installed on a flat surface.

NOTE!

- For new applications, extra preparations are necessary, including planning the installation location and network cable routing, burying underground cable conduits, and connecting the AC110V mains supply.
- For retrofit applications, it is necessary to make grooves in the ground for burying cable protection conduits. For the position of the grooves, see the figure below.

Take a group of two lanes as an example, the lane widths are 1050mm and 650mm respectively.

1. Draw two parallel lines 1506.9mm long and 2270mm apart along the lane direction at the installation position.
2. At the midpoint of the two parallel lines, draw a line A perpendicular to them.
3. Use line A as a baseline and refer to the figure below to locate the mounting holes and wire grooves.

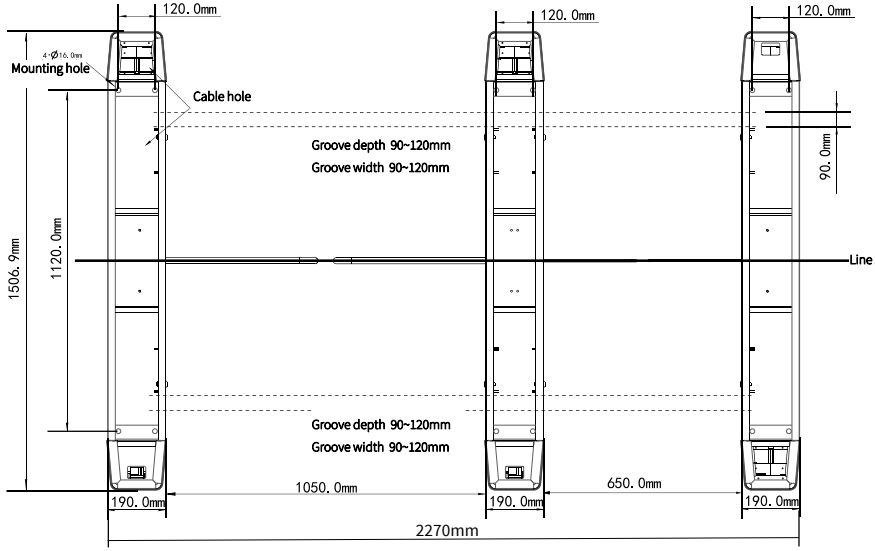

CAUTION!

- The lane width can be adjusted according to the actual situation, and the dimensions of the device are subject to the actual product.
- The width, depth and length of the grooves are subject to the actual application scenario, the values shown in the figure above are for reference only.

3.3 Install Pedestals

Before installation, you need to disassemble some components. See the figure below for details.

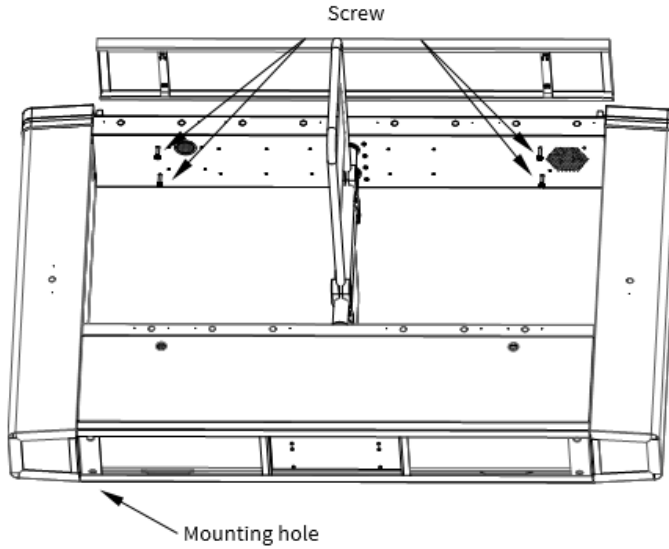

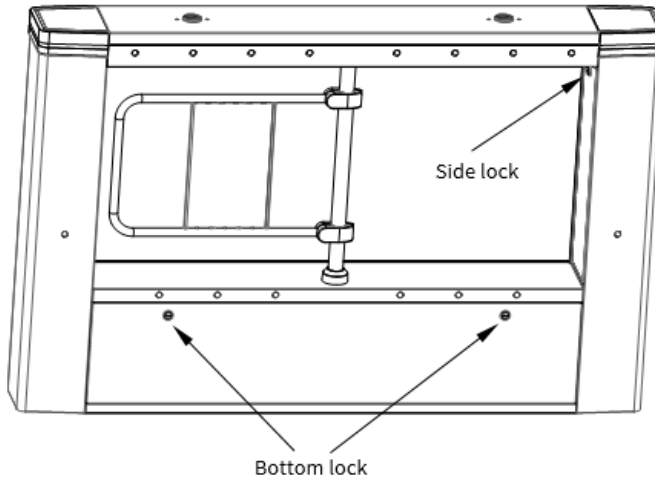

1. Use the key to open the bottom locks.
2. Drill holes on the ground with reference to the mounting holes determined in 3.2 Locate Pedestals and insert expansion bolts.

NOTE!

The M12*100 expansion bolts are only suitable for concrete floors. For other types of floors, you need to prepare the matching expansion bolts. The length of the expansion bolt should not be less than 120mm, 150mm is recommended.

3. Move the pedestals to the corresponding positions, align the mounting holes at the bottom of the pedestals with the expansion bolts on the ground, and then tighten the bolts to secure the pedestals.
4. Tighten the bottom locks.

3.4 Wiring

The components of each pedestal have been connected well at the factory. You only need to connect the bridging cables (used for communication and power supply) and connect the device to the AC110V mains supply to power the entire system.

CAUTION!

- Be sure to disconnect power before you start electrical installation and maintenance, otherwise it may cause personal injury and device damage.
- The power supply and bridging cables must be grounded well.
- Be very careful during transportation, storage and installation to prevent device damage from falling.
- An appropriate disconnect device shall be provided as part of the building installation.

Before wiring, you need to disassemble some components. See 3.3 Install Pedestals for details.

1. Use the L-key to remove the 4 M6 hexagon socket screws under the top cover, and then remove the top cover.
2. Use the key to open the side lock.
3. After wiring, secure the side lock, replace the top cover, and then tighten the M6 hexagon socket screws.

3.4.1 System Wiring

Connect the AC110V mains supply to the air circuit breakers in the right and middle pedestals. Connect the L (live wire) and N (neutral wire) wires to the air circuit breaker and connect the PE wire (yellow and green wire) to a grounding terminal.

CAUTION!

- Be sure to disconnect power before installation and maintenance.
- The power supply and bridging cables must be grounded well.
- The cables must be connected correctly, for example, the L wire should be connected to the L terminal.
- Make sure that there is no bare cable and that the wiring parts are insulated.

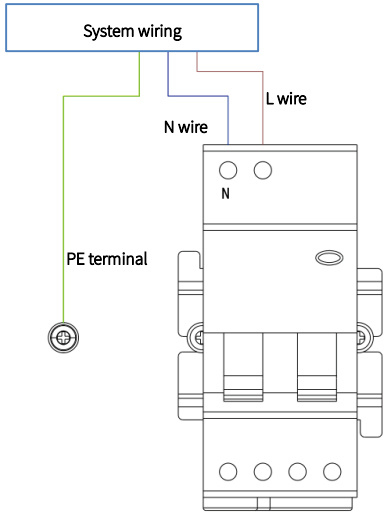

3.4.2 Control Board Wiring

The control board is divided into the main control board and the sub control board.

The main control board (located in the right pedestal and the middle pedestal) is used to control IR lights, connect components (for example, speaker), supply power to the sub control board, communicate with the sub control board, etc.

The sub control board is used to control the motor and status indicator, connect intelligent recognition terminals, etc.

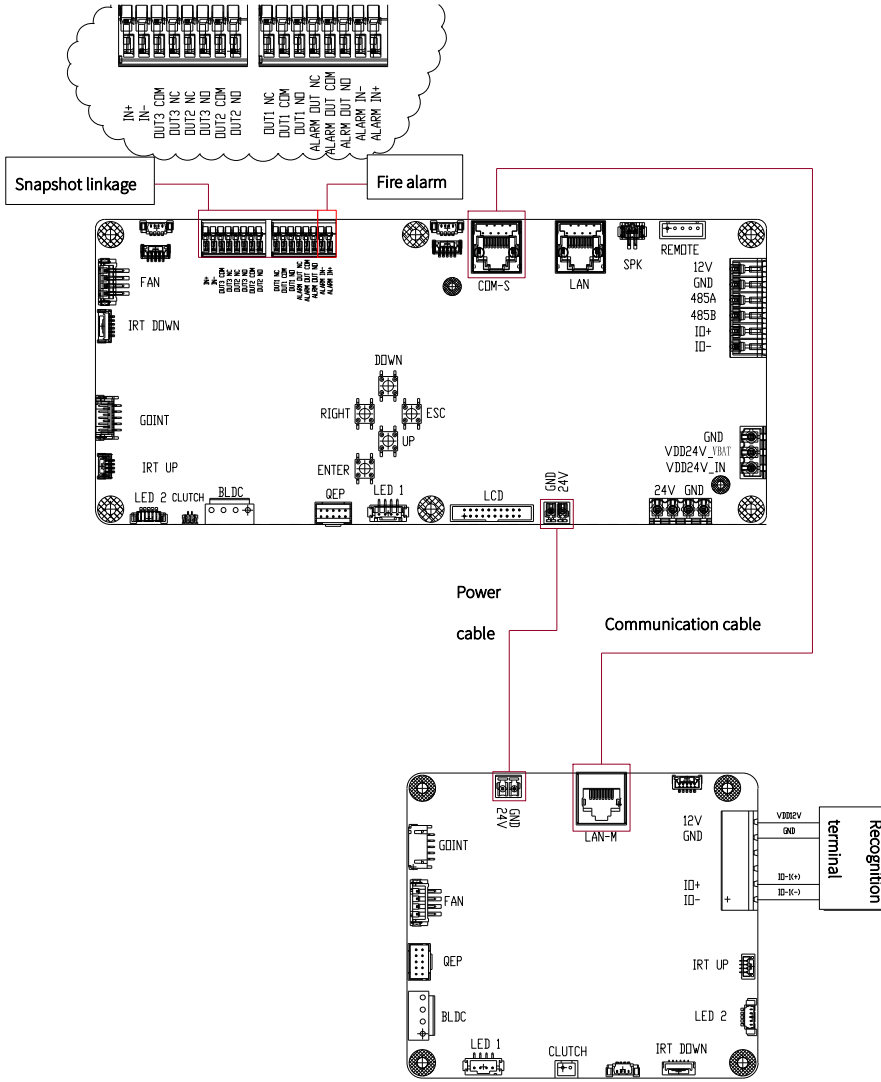

1 Connect Bridging Cables

After you connect bridging cables, the pedestals can communicate with each other and the main control board can supply power to the sub control board.

NOTE!

- Two bridging cables are included, one is a communication cable (Cat5e network cable), and the other is a power cable (Phoenix terminal). The power cable is a 1.5mm^2 four-core (copper core) cable with a 5.08mm pitch Phoenix terminal; the communication cable is a Cat5e eight-core network cable.
- The supplied two bridging cables are 6m long and should be protected by separate PVC conduits to avoid interference. The conduit should have an outer diameter of 40mm and a wall thickness of 2mm.
- Cat5e network cables are not suitable for long-distance communication. When the transmission distance exceeds 80m, a signal enhancement device or an optical fiber is required.
- To ensure good heat dissipation and easy cable routing, the cross-sectional area of the cables in the PVC pipe cannot exceed half of the cross-sectional area of the PVC pipe.

2 Connect Fire Alarm Devices

The device can be connected with external fire alarm devices and trigger actions in case of fire.

NOTE!

For the detailed information of interfaces on the fire alarm device, see the user manual shipped with the device or consult the manufacturer.

3 Connect Intelligent Recognition Terminals

The intelligent recognition terminal can control barrier opening after it is connected to the sub control board.

NOTE!

For the detailed information of interfaces on the intelligent recognition terminal, see the quick guide shipped with the terminal.

4 Connect Capture Devices

After the capture device (IPC, etc.) is connected to the gate, when the gate detects abnormal conditions such as tailgating, intrusion, and malfunction, it will buzz and trigger the connected capture device to take snapshots.

NOTE!

For the detailed information of interfaces on the capture device, see the user manual shipped with the device or consult the manufacturer.

4 Device Configuration

4.1 Startup

After you complete the installation and wiring, connect the device to power. The device starts to work normally after self-test with no abnormality.

4.2 Lane Configuration

NOTE!

- Please configure the lane parameters under the guidance of professionals.
- The LCD screen is not hot-pluggable.

There are 5 buttons on the main control board: Up, Esc, Enter, Right, and Down.

- Up: Move the focus up and change the values seen on the screen.
- Esc: Return to the previous menu/page.
- Enter: Confirm your selection.
- Right: Confirm your selection or change the values seen on the screen.
- Down: Move the focus down and change the values seen on the screen.

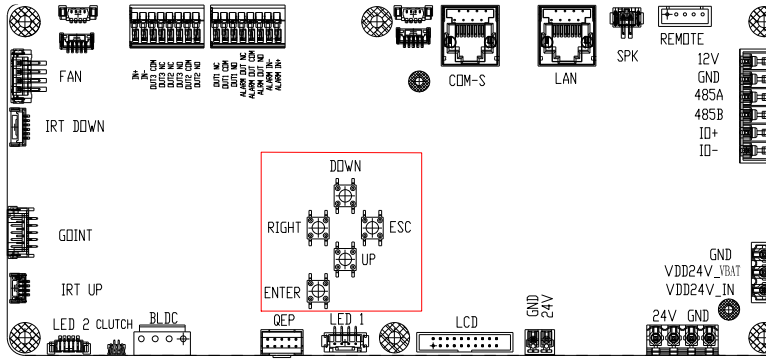

The lane parameters are described in the table below.

First-level Menu	Second-level Menu	Description
Access Control	Control Mode	Nine options: A Authorize B Authorize, A Authorize B Refuse, A Authorize B Free, A Free B Free, A Free B Authorize, A Free B Refuse, A Refuse B Refuse, A Refuse B Authorize, A Refuse B Free. Default: A Authorize B Authorize.
	Lane Status	Two options: Keep closed, keep open. Default: Keep closed.
	In Timeout	Range: 3 to 60. Unit: s. Default: 5.
	Out Timeout	Range: 3 to 60. Unit: s. Default: 5.
	In Closing Delay	Range: 0 to 60. Unit: s. Default: 0.
	Out Closing Delay	Range: 0 to 60. Unit: s. Default: 0.
	Abnormal Alarm	Two options: On, Off. Default: On.
	Authorization Memory	Two options: On, Off. Default: On.
	Lane Authorization	Two options: On, Off. Default: On.
Controller	Door Opening Speed	Five options: 1, 2, 3, 4, 5. 1 means slowest, 5 means fastest. Default: 3.
	Main Controller Calibration	Two options: In Fine-tuning, Out Fine-tuning. Adjust the barrier closing position to align the barriers of the main and sub controllers. Only 1° can be adjusted at a time.
	Sub Controller Calibration	Two options: In Fine-tuning, Out Fine-tuning. Adjust the barrier closing position to align the barriers of the main and sub controllers. Only 1° can be adjusted at a time.

First-level Menu	Second-level Menu	Description
Lane Control	Door Opening Control	Three options: Normal, In Opening, Out Opening. This configuration has a higher priority than the lane status configuration.
	Test Mode	When enabled, the barriers will open and close repeatedly, and the screen will display the IR status. Press the exit button after completing the test.
Lane Status	Emergency	Two options: None, Emergency Opening.
	Authorization Status	Five options: Closing, Protection Action, In Opening, Out Opening, Error.
	Lane Status	Five options: Closed, Opening, Closing, In Opening, Out Opening.
	Abnormal Event	Four options: Tailgating, Reverse Access, Intrusion, None.
Statistics	Total In/Out	Count the total number of people passing through.
	People In	Count the number of people entering.
	People Out	Count the number of people exiting.
Device Info	/	Display the software version of the lane board, main control board, and sub control board, and the device model.
System	Reset	Restore default settings and restart. Press ENTER, and the system will reset all settings and then restart the device.
	Restart	Restart the device.
	Clock	Set the system time.
	System Status	View the error information of the device, including controller status, light curtain status, and error codes.
	Network Parameters	Display network parameters such as IP address, subnet mask, etc. Default IP: 192.168.1.13. Default subnet mask: 255.255.255.0.

First-level Menu	Second-level Menu	Description
	Network Config	Set the device's IP address.
	Security Level	Two options: Low, High. Default: Low.
	Volume	Six options: 0, 1, 2, 3, 4, 5 (0 is mute). Default: 5.

NOTE!

The display screen will automatically display the IR status if there is no operation within 15s. You can press any key to return to the last operation page.

5 Appendix

5.1 Error Message Description

You can locate common errors by checking the operating status of the device.

Controller

On the main control board, select **Controller** and press **Enter** to configure the controller parameters. If the sub control board is not detected, the **Door Opening Speed**, **Main Controller Calibration** and **Sub Controller Calibration** parameters are all displayed as "----" and cannot be configured.

System Status

On the main control board, select **System** > **System Status** and press **Enter** to view the controller status and light curtain status.

- Controller Status
  - When the control board is normal, the controller status is displayed as "Online".
  - When the control board is offline, the controller status is displayed as "Main Controller Offline", "Sub Controller Offline" or "Main&Sub Controller Offline".
- Light Curtain Status
  - When the IR light curtains are normal, the light curtain status is displayed as "Normal".

- When the IR light curtains are abnormal, the light curtain status is displayed as “Upper Row Failure”, “Lower Row Failure", or “Upper&Lower Row Failure”.

To view the detailed light curtain status, press **Down**.

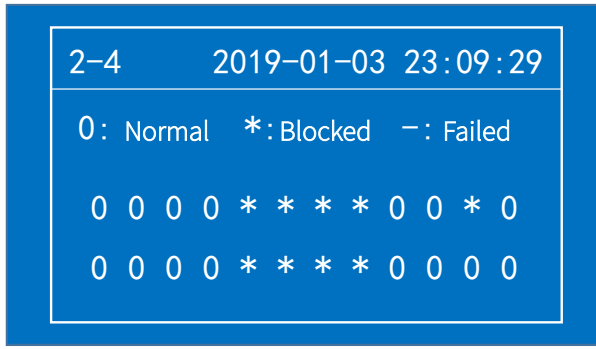

- Normal: The IR light curtains are normal.
- Blocked: The IR light curtains are not installed properly.
- Failed:
  - IR light curtain blocking is detected during POST.
  - The IR light curtains have been blocked continuously for 15 minutes.

5.2 Control Board Interface Description

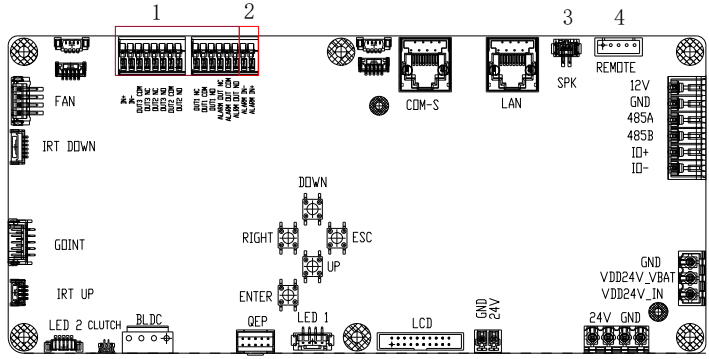

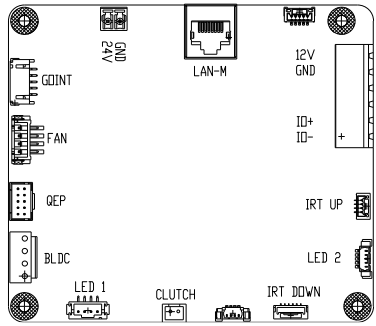

Some interfaces of the main control board are described in the table below.

No.	Interface		Description
1	Snapshot linkage device		Connect capture cameras.
2	Fire alarm input		Fire alarm signals input, with the linkage of buildings' fire alarm.
3	Loudspeaker		Connect a loudspeaker.
4	Remote control		Connect the receiver in the device.
5	Intelligent recognition terminal	IO1/ IO2	Intelligent recognition terminal door opening signal input.
		RS485A/ RS485B	485 communication interface.
		12V/GND	Intelligent recognition terminal power supply output (12V).

Disclaimer and Safety Warnings

Copyright Statement

Trademark Acknowledgements

unv uniarch are trademarks or registered trademarks of Uniview.
All other trademarks, products, services and companies in this manual or the product described in this manual are the property of their respective owners.

Export Compliance Statement

Uniview complies with applicable export control laws and regulations worldwide, including that of the People's Republic of China and the United States, and abides by relevant regulations relating to the export, re-export and transfer of hardware, software and technology. Regarding the product described in this manual, Uniview asks you to fully understand and strictly abide by the applicable export laws and regulations worldwide.

EU Authorised Representative

UNV Technology EUROPE B.V. Treubstraa 1, 2288 EG, Rijswijk, Netherlands.
If you have any feedback, please contact us at service@uniview.com.

Privacy Protection Reminder

Uniview complies with appropriate privacy protection laws and is committed to protecting user privacy. You may want to read our full privacy policy at our website and get to know the ways we process your personal information. Please be aware, using the product described in this manual may involve the collection of personal information such as face, fingerprint, license plate number, email, phone number, GPS. Please abide by your local laws and regulations while using the product.

About This Manual

- This manual is intended for multiple product models, and the photos, illustrations, descriptions, etc, in this manual may be different from the actual appearances, functions, features, etc, of the product.
- This manual is intended for multiple software versions, and the illustrations and descriptions in this manual may be different from the actual GUI and functions of the software.
- Despite our best efforts, technical or typographical errors may exist in this manual. Uniview cannot be held responsible for any such errors and reserves the right to change the manual without prior notice.
- Users are fully responsible for the damages and losses that arise due to improper operation.
- Uniview reserves the right to change any information in this manual without any prior notice or indication. Due to such reasons as product version upgrade or regulatory requirement of relevant regions, this manual will be periodically updated.

Disclaimer of Liability

- To the extent allowed by applicable law, in no event will Uniview be liable for any special, incidental, indirect, consequential damages, nor for any loss of profits, data, and documents.
- The product described in this manual is provided on an "as is" basis. Unless required by applicable law, this manual is only for informational purpose, and all statements, information, and recommendations in this manual are presented without warranty of any kind, expressed or implied, including, but not limited to, merchantability, satisfaction with quality, fitness for a particular purpose, and noninfringement.
- Users must assume total responsibility and all risks for connecting the product to the Internet, including, but not limited to, network attack, hacking, and virus. Uniview strongly recommends that users take all necessary measures to enhance the protection of network, device, data and personal information. Uniview disclaims any liability related thereto but will readily provide necessary security related support.
- To the extent not prohibited by applicable law, in no event will Uniview and its employees, licensors, subsidiary, affiliates be liable for results arising out of using or inability to use the product or service, including, not limited to, loss of profits and any other commercial damages or losses, loss of data, procurement of substitute goods or services; property damage, personal injury, business interruption, loss of business information, or any special, direct, indirect, incidental, consequential, pecuniary, coverage, exemplary, subsidiary losses, however caused and on any theory of liability, whether in contract, strict liability or tort (including negligence or otherwise) in any way out of the use of the product, even if Uniview has been advised of the possibility of such damages (other than as may be required by applicable law in cases involving personal injury, incidental or subsidiary damage).

- To the extent allowed by applicable law, in no event shall Uniview's total liability to you for all damages for the product described in this manual (other than as may be required by applicable law in cases involving personal injury) exceed the amount of money that you have paid for the product.

Network Security

Please take all necessary measures to enhance network security for your device.

The following are necessary measures for the network security of your device:

- Change default password and set strong password: You are strongly recommended to change the default password after your first login and set a strong password of at least nine characters including all three elements: digits, letters and special characters.
- Keep firmware up to date: It is recommended that your device is always upgraded to the latest version for the latest functions and better security. Visit Uniview's official website or contact your local dealer for the latest firmware.

The following are recommendations for enhancing network security of your device:

- Change password regularly: Change your device password on a regular basis and keep the password safe. Make sure only the authorized user can log in to the device.
- Enable HTTPS/SSL: Use SSL certificate to encrypt HTTP communications and ensure data security.
- Enable IP address filtering: Allow access only from the specified IP addresses.
- Minimum port mapping: Configure your router or firewall to open a minimum set of ports to the WAN and keep only the necessary port mappings. Never set the device as the DMZ host or configure a full cone NAT.
- Disable the automatic login and save password features: If multiple users have access to your computer, it is recommended that you disable these features to prevent unauthorized access.
- Choose username and password discretely: Avoid using the username and password of your social media, bank, email account, etc, as the username and password of your device, in case your social media, bank and email account information is leaked.
- Restrict user permissions: If more than one user needs access to your system, make sure each user is granted only the necessary permissions.
- Disable UPnP: When UPnP is enabled, the router will automatically map internal ports, and the system will automatically forward port data, which results in the risks of data leakage. Therefore, it is recommended to disable UPnP if HTTP and TCP port mapping have been enabled manually on your router.
- SNMP: Disable SNMP if you do not use it. If you do use it, then SNMPv3 is recommended.
- Multicast: Multicast is intended to transmit video to multiple devices. If you do not use this function, it is recommended you disable multicast on your network.
- Check logs: Check your device logs regularly to detect unauthorized access or abnormal operations.
- Physical protection: Keep the device in a locked room or cabinet to prevent unauthorized physical access.
- Isolate video surveillance network: Isolating your video surveillance network with other service networks helps prevent unauthorized access to devices in your security system from other service networks.

Learn More

You may also obtain security information under Security Response Center at Uniview's official website.

Safety Warnings

The device must be installed, serviced and maintained by a trained professional with necessary safety knowledge and skills. Before you start using the device, please read through this guide carefully and make sure all applicable requirements are met to avoid danger and loss of property.

Storage, Transportation, and Use

- Store or use the device in a proper environment that meets environmental requirements, including and not limited to, temperature, humidity, dust, corrosive gases, electromagnetic radiation, etc.
- Make sure the device is securely installed or placed on a flat surface to prevent falling.
- Unless otherwise specified, do not stack devices.
- Ensure good ventilation in the operating environment. Do not cover the vents on the device. Allow adequate space for ventilation.
- Protect the device from liquid of any kind.
- Make sure the power supply provides a stable voltage that meets the power requirements of the device. Make sure the power supply's output power exceeds the total maximum power of all the connected devices.
- Verify that the device is properly installed before connecting it to power.
- Do not remove the seal from the device body without consulting Uniview first. Do not attempt to service the product yourself. Contact a trained professional for maintenance.
- Always disconnect the device from power before attempting to move the device.
- Take proper waterproof measures in accordance with requirements before using the device outdoors.

Power Requirements

- Install and use the device in strict accordance with your local electrical safety regulations.
- Use a UL certified power supply that meets LPS requirements if an adapter is used.
- Use the recommended cordset (power cord) in accordance with the specified ratings.
- Only use the power adapter supplied with your device.
- Use a mains socket outlet with a protective earthing (grounding) connection.

- Ground your device properly if the device is intended to be grounded.

Battery Use Caution

- When battery is used, avoid:
  - Extremely high or low temperature and air pressure during use, storage and transportation.
  - Battery replacement.
- Use the battery properly. Improper use of the battery such as the following may cause risks of fire, explosion or leakage of flammable liquid or gas.
  - Replace battery with an incorrect type;
  - Dispose of a battery into fire or a hot oven, or mechanically crushing or cutting of a battery;
- Dispose of the used battery according to your local regulations or the battery manufacturer's instructions.

Avertissement de l'utilisation de la batterie

- Lorsque utiliser la batterie, évitez:
  - Température et pression d'air extrêmement élevées ou basses pendant l'utilisation, le stockage et le transport.
  - Remplacement de la batterie.
- Utilisez la batterie correctement. Mauvaise utilisation de la batterie comme celles mentionnées ici, peut entraîner des risques d'incendie, d'explosion ou de fuite liquide de gaz inflammables.
  - Remplacer la batterie par un type incorrect;
  - Disposer d'une batterie dans le feu ou un four chaud, écraser mécaniquement ou couper la batterie;
- Disposer la batterie utilisée conformément à vos règlements locaux ou aux instructions du fabricant de la batterie.
- Personal safety warnings:
  - Chemical Burn Hazard. This product contains a coin cell battery. Do NOT ingest the battery. It can cause severe internal burns and lead to death.
  - Keep new and used batteries away from children.
  - If the battery compartment does not close securely, stop using the product and keep it away from children.
  - If you think batteries might have been swallowed or placed inside any part of the body, seek immediate medical attention.
- Avertissements de sécurité personnelle:
  - Risque de brûlure chimique. Ce produit contient une batterie de cellules. N'ingérer pas la batterie. Si la batterie de cellule est avalée, elle peut causer de graves brûlures internes en seulement 2 heures et peut entraîner la mort.
  - Gardez les batteries nouvelles ou utilisées à l'écart des enfants.
  - Si le compartiment de la batterie ne se ferme pas en toute sécurité, cessez d'utiliser le produit et gardez-le à l'écart des enfants.
  - Si vous pensez que des piles ont pu être avalées ou placées à l'intérieur d'une partie du corps, consultez immédiatement un médecin.

Regulatory Compliance

FCC Statements

This device complies with Part 15 of the FCC Rules. Operation is subject to the following two conditions: (1) this device may not cause harmful interference, and (2) this device must accept any interference received, including interference that may cause undesired operation.

Visit https://global.uniview.com/Support/Download_Center/Product_Installation/Declaration/ for SDoC.

Caution: The user is cautioned that changes or modifications not expressly approved by the party responsible for compliance could void the user's authority to operate the equipment.

NOTE: This equipment has been tested and found to comply with the limits for a Class A digital device, pursuant to part 15 of the FCC Rules. These limits are designed to provide reasonable protection against harmful interference when the equipment is operated in a commercial environment. This equipment generates, uses, and can radiate radio frequency energy and, if not installed and used in accordance with the instruction manual, may cause harmful interference to radio communications. Operation of this equipment in a residential area is likely to cause harmful interference in which case the user will be required to correct the interference at his own expense.

LVD/EMC Directive

This product complies with the European Low Voltage Directive 2014/35/EU and EMC Directive 2014/30/EU.

WEEE Directive–2012/19/EU

The product this manual refers to is covered by the Waste Electrical & Electronic Equipment (WEEE) Directive and must be disposed of in a responsible manner.

Battery Regulation- (EU) 2023/1542

Battery in the product complies with the European Battery Regulation (EU) 2023/1542. For proper recycling, return the battery to your supplier or to a designated collection point.

Better Security, Better World

www.uniview.com

globalsupport@uniview.com