4MP Fixed IR Dome Network Camera

IPC324LB-SF28(40)-A

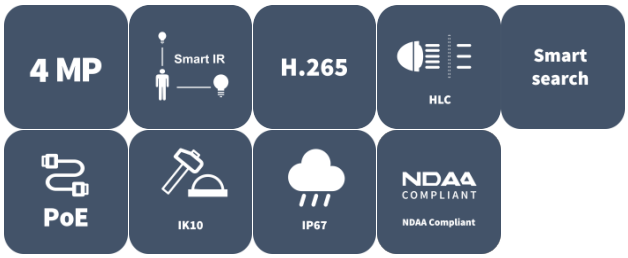

Features

- High quality image with 4 MP, 1/3.0" CMOS sensor
- 4 MP (2560 × 1440)@25/20 fps; 3 MP (2304 × 1296)@25/20 fps; 1080P (1920 × 1080)@30/25 fps
- Ultra 265, H.265, H.264
- Smart IR, up to 30 m (98.4 ft.) IR distance
- Day/night functionality
- 2D/3D DNR (digital noise reduction)
- IP67 protection
- IK10 vandal resistant
- DC 12 V, PoE (IEEE 802.3af) power supply
- 2-axis

Specifications

Model	IPC324LB-SF28-A	IPC324LB-SF40-A
Camera		
Max Resolution	4 MP	
Sensor	1/3.0" CMOS	
Min. Illumination	Color: 0.01 Lux (F2.1, AGC ON), 0 Lux with IR on	
Day/Night	IR-cut filter with auto switch (ICR)	
Shutter	Auto/Manual, 1 ~ 1/100000s	
Adjustment Angle	Pan: 3° to 360°, Tilt: 0° to 68°	
S/N	>52 dB	
WDR	DWDR	
Lens		
Focal Length	2.8 mm	4.0 mm
Iris Type	Fixed	
Iris	F2.1	
Field of View (H)	97.0°	79.0°
Field of View (V)	52.2°	42.3°
Field of View (D)	107.5°	85.1°
DORI		
DORI Distance (Lens)	2.8 mm	4 mm
DORI Distance (Detect)	63.0 m (206.7 ft.)	90.0 m (295.3 ft.)
DORI Distance (Observe)	25.2 m (82.7 ft.)	36.0 m (118.1 ft.)
DORI Distance (Recognize)	12.6 m (41.3 ft.)	18.0 m (59.1 ft.)
DORI Distance (Identify)	6.3 m (20.7 ft.)	9.0 m (29.5 ft.)
Illuminator		
Supplemental Light	IR	
Illumination Distance (IR)	30 m (98.4 ft.)	
Wavelength	850 nm	
IR On/Off Control	Auto/Manual	
Video		
Video Compression	Ultra 265, H.265, H.264	
H.264 Code Profile	Baseline profile, Main profile, High profile	
Frame Rate	Main Stream: 4 MP (2560 × 1440), max. 25 fps; 3 MP (2304 × 1296), max. 25 fps; 1080P (1920 × 1080), max. 30 fps Sub Stream: D1 (720 × 576), max. 30 fps; 640 × 360, max. 30 fps; 2CIF (704 × 288), max. 30 fps; CIF (352 × 288), max. 30 fps	
Video Bit Rate	128 Kbps to 6144 Kbps	
U-code	Support(Main stream)	
OSD	Up to 4 OSDs	
Privacy Mask	Up to 4 areas	
ROI	Support	
Video Stream	Dual streams	

Image	
White Balance	Auto, Outdoor, Fine tune, Sodium lamp, Locked, Auto2
Digital Noise Reduction	2D/3D DNR
Smart IR	Support
Flip	Normal, Flip vertical, Flip horizontal, 180°
Dewarping	N/A
HLC	Support
BLC	Support
Defog	Digital defog
Events	
Basic Detection	Motion detection
General Function	Watermark, IP address filtering, Access policy, ARP protection, RTSP authentication, User authentication, HTTP authentication
Network	
Protocols	IPv4, IGMP, ICMP, ARP, TCP, UDP, DHCP, RTP, RTSP, RTCP, RTMP, DNS, DDNS, NTP, UPnP, HTTP, HTTPS, QoS, SSL/TLS
Compatible Integration	ONVIF (Profile S, Profile T) , API, SDK
User/Host	Up to 32 users, 2 user levels: administrator and common user
Security	Password Protection, Strong Password, HTTPS Encryption, Export Operation Logs, Basic and Digest Authentication for RTSP, Digest Authentication for HTTP, WSSE and Digest Authentication for ONVIF
Client	EZStation, APP
Web Browser	Plug-in required live view: IE 10+, Chrome 45+, Firefox 52+, Edge 79+, Plug-in free live view: Chrome 57+, Firefox 58+, Edge 16+
Interface	
Audio I/O	N/A
Alarm I/O	N/A
Serial Port	N/A
Built-in Mic	N/A
Built-in Speaker	N/A
WIFI	N/A
Network	1 × RJ45 10 M/100 M Base-TX Ethernet
Video Output	N/A
Certification	
EMC	CE-EMC (EN 55032, EN 61000-3-3, EN IEC 61000-3-2, EN 50130-4) FCC (FCC 47 CFR part15 B)
Safety	CE-LVD (EN 62368-1)
Environment	CE-RoHS (2011/65/EU ; (EU) 2015/863) ; WEEE (2012/19/EU)
Protection	IP67 (IEC 60529) IK10 (IEC 62262)
General	
Power	DC 12 V±25%, PoE (IEEE 802.3af)
Power Consumption	Max. 5.0 W

Power Interface	Ø5.5 mm coaxial power plug
Dimensions	Ø118 mm × 95 mm (Ø4.6" × 3.8") (Ø × H)
Weight	0.28 kg (0.62 lb.)
Material	Metal + Plastic
Working Environment	-30 ℃ to 60 ℃ (-22 ℉ to 140 ℉), Humidity: ≤ 95% RH (non-condensing)
Storage Environment	-30 ℃ to 60 ℃ (-22 ℉ to 140 ℉), Humidity: ≤ 95% RH (non-condensing)
Surge Protection	4 KV
Reset Button	N/A
Web Client Language	1 Language: English

Dimensions

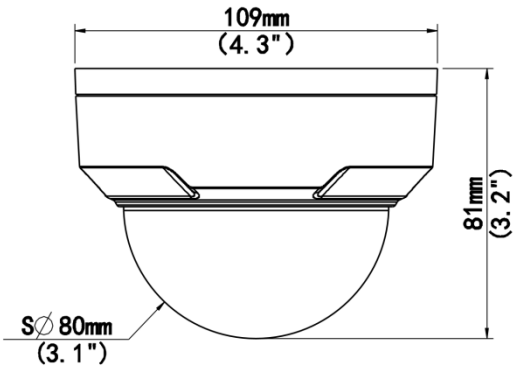

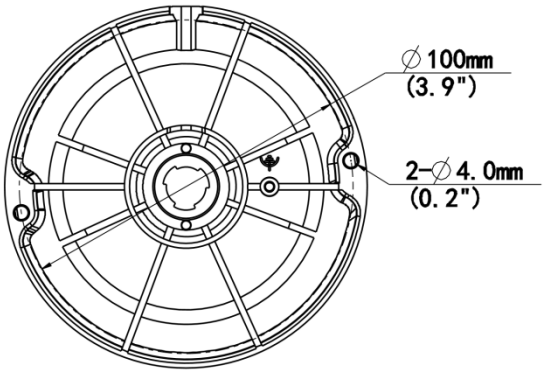

Accessories

TR-JB03-G-IN	HS-205S	TR-UM06-E-IN
Mini Dome Junction Box(Support Wiring From Behind)	Fixed Dome Sunshade Shell	Slant Mounting Bracket For Fixed Dome

TR-A01-IN NPT 3/4'' Waterproof Cable Gland	**TR-SE24-IN** Dome Pendent Mounting Pole 200mm	**TR-SE24-A-IN** Dome Pendent Mounting Pole 500mm
TR-CM24-IN Dome Pendent Mounting Bracket(Indoor)	**TR-JB07/WM03-G-IN-V2** Wall Mounting Assembling Bracket For Dome&Mini Dome&Plastic Turret Camera	**TR-WM03-D-IN-V2** Wall Mounting Bracket For Dome&Mini Dome&Plastic Turret Camera
TR-UC08-C-V2 Bullet&Dome Corner Mounting Bracket	**TR-FM116** In-ceiling Bracket for Fix-dome	**TR-WM07P-B** Wall Mounting Plastic Bracket
TR-UP06-C-IN-V2 Pole Mounting Bracket For Bullet Junction Box Only		

Unlimited New View

Zhejiang Uniview Technologies Co., Ltd.

http://www.uniview.com

overseasbusiness@uniview.com; globalsupport@uniview.com

No. 369, Xietong Road, Xixing Sub-district, Binjiang District, Hangzhou City, 310051, Zhejiang Province, China

©2023-2026 Zhejiang Uniview Technologies Co., Ltd. All rights reserved.

*Product specifications and availability are subject to change without notice.

Despite our best efforts, technical or typographical errors may exist in this document. Uniview cannot be held responsible for any such errors and reserves the right to change the contents of this document without prior notice.