16MP+4MP Tiangong Panoramic Linkage All-In-One Machine

IPC96342EFW-X25-E8-W-VH3-NB



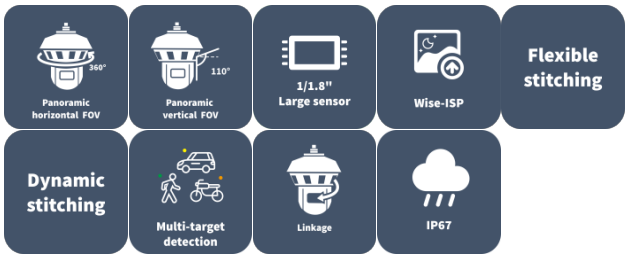

Features

- Tiangong Panoramic Linking All-in-One Camera, supports 8-sensor stitching, enabling full 360° panoramic viewing
- Features a 1/1.8" high-sensitivity CMOS sensor, meeting ultra-low-light (starlight-level) surveillance requirements with high clarity in night-time imaging
- Employs advanced dynamic stitching technology that dynamically detects scene changes and automatically adjusts seam parameters in real time, delivering more realistic image quality across diverse environments
- Supports flexible multi-lens stitching for 180°, 270°, or 360° panoramic coverage
- Supports up to 8192 × 1800 @ 30fps high-resolution panoramic output, with detail channel resolution up to 2688 × 1520 @ 60fps
- Supports single-IP dual-stream output, enabling simultaneous preview of panoramic and detailed live views
- Panoramic vertical field of view reaches 110°, ensuring no blind spots even at a 6-meter mounting height
- Built-in high-precision encoder with accuracy up to ±0.04°; smooth PT operation with automatic deviation correction
- The detail channel features an Wise-ISP algorithm to restore vivid imagery in ultra-low-light conditions
- Manually select a target in the panoramic view; the detail channel automatically links and tracks the target with high precision, accurately monitoring its movement
- New one-click panoramic-detail calibration function, improving calibration usability and accuracy
- Supports handover tracking: when a tracked target exits the panoramic view, the detail channel continues tracking, extending the monitoring range
- Supports tracking-based snapshot capture: enables structured image capture and attribute extraction during the tracking process
- Supports manual zoom: draw a box on any area in the panoramic view via Web interface; the detail channel automatically zooms

in and centers the selected region

- Panoramic Channel: supports perimeter intrusion detection and people counting
- Detail Channel: Supports perimeter intrusion detection, people counting, face detection, mixed-traffic detection, and auto-tracking
- Perimeter Intrusion Detection: supports 4 modes: crossing boundary, entering zone, leaving zone, and area intrusion. The detail channel supports classification-based detection and alerting for motor vehicles, non-motor vehicles, and pedestrians. The panoramic channel supports classification detection for motor vehicles and pedestrians
- People Counting: supports foot traffic statistics and crowd density detection. Multi-zone counting capability to meet diverse application needs
- Auto-Tracking: supports classification-based tracking of motor vehicles, non-motor vehicles, and pedestrians. Automatically returns to the preset position after reaching the set tracking duration
- Face Detection: supports face and body detection, snapshot capture, and attribute extraction, with face-body association. Offers three capture optimization modes: effect-priority, speed-priority, and cycle-optimized. Supports face angle filtering
- : supports on-device .Supports up to 16 face databases with a total capacity of 100000 face images
- Heat Haze Reduction Technology: Effectively reduces heat shimmer effects in high-temperature outdoor environments, ensuring stable and clear imaging
- Integrated Audio-Visual Alarm: Supports linked strobe light and voice alarm; alarm messages can be customized
- Gyroscopic Image Stabilization: Effectively reduces image shake for stable and clear video
- Adaptive Glare Suppression: At night, automatically adjusts image brightness based on the presence of moving vehicles on the road
- Wiper Function: Ensures clear imaging during rainfall
- IP67 rated for dust and water resistance

Specifications

Channel	Channel 1 (Panorama)	Channel 2 (Detail)
Camera		
Sensor	1/1.8" CMOS	
Max Resolution	16 MP	4 MP
Min. Illumination	Color: 0.0003 Lux (F1.0, AGC ON)	Color: 0.0005 Lux (F1.2, AGC ON) IR: 0.0003 Lux (F1.2, AGC ON)
Shutter	Auto/Manual, 1 to 1/100000 s	
WDR	N/A	120 dB
S/N	> 56 dB	
Lens		
Optical Zoom	N/A	25X
Digital Zoom	N/A	8X
Field of View (H)	360°	59.91°(W)~3.89°(T)
Field of View (V)	110°	35.92°(W)~2.19°(T)
DORI		
DORI Distance (Lens)	2 mm	6.0mm to 150.0mm
DORI Distance (Detect)	31.0 m (101.8 ft)	93.1 m to 2327.6 m (305.5 ft. to 7636.4 ft)
DORI Distance (Observe)	12.4 m (40.7 ft)	37.2 m to 931.0 m (122.2 ft. to 3054.6 ft)
DORI Distance (Recognize)	6.2 m (20.4 ft)	18.6 m to 465.5 m (61.1 ft. to 1527.3 ft)

DORI Distance (Identify)	3.1 m (10.2 ft)	9.3 m to 232.8 m (30.5 ft. to 763.6 ft)
Illuminator		
Light On/Off Control	N/A	Auto/Manual
Illumination Distance (IR)	N/A	200 m (656.2 ft)
Illumination Distance (Warm Light)	N/A	100 m (328.1 ft)
Image		
Defog	N/A	Digital defog
White Balance	Sodium lamp, Area white balance, Outdoor, Locked, Fine tune, Auto2, Auto	
Flip	N/A	Flip vertical, 180°, Flip horizontal, Normal
HLC	Support	
BLC	Support	
Heatwave Reduction	N/A	Support
Video		
Frame Rate-Main Stream	16 MP (8192 × 1800) , max. 30 fps; 5760 × 1264, max. 30 fps; 4096 × 900, max. 30 fps	4 MP (2688 × 1520) , max. 60 fps; 4 MP (2560 × 1440) , max. 60 fps; 1080P (1920 × 1080) , max. 60 fps; 720P (1280 × 720) , max. 60 fps; D1 (720 × 576), max. 60 fps; 640 × 360, max. 60 fps
Frame Rate-Sub Stream	2560 × 560, max. 30 fps	1080P (1920 × 1080) , max. 60 fps; 720P (1280 × 720) , max. 60 fps; D1 (720 × 576), max. 60 fps; 640 × 360, max. 60 fps
Frame Rate-Third Stream	2048 × 452, max. 30 fps	720 × 576, max. 60 fps; 640 × 360, max. 60 fps; 704 × 288, max. 60 fps; 352 × 288, max. 60 fps
Video Bit Rate	128 Kbps to 16 Mbps	
Privacy Mask	Up to 8 areas (8 blacks/ 8 mosaics)	24 areas, up to 8 areas per scene
Video Compression	H.265, H.264, MJPEG, Ultra 265	
U-code	Support	
ROI	Up to 8 areas	
Video Stream	Triple streams	
OSD	Up to 10 OSDs	
Live View		
Maximum Bitstream	20	
Maximum Bandwidth	50 Mbps	
Plugin Free	Support	
Audio		
Audio Compression	G.711A, G.711U	
Audio Bitrate	128 Kbps	
Two-way Audio	Support	

Suppression	Support	
Sampling Rate	8 kHz, 16 kHz	
Intelligent		
Linkage Function	Support. Triggered by fixed lens via smart intrusion prevention function to track target	
People Counting	Support people flow counting and crowd density detection	
Smart Intrusion Prevention	Cross line detection, intrusion detection, enter area detection, leave area detection (support false alarm filtering and the classification of human, non-motor vehicle and vehicle)	
Multi-target Detection	N/A	
Auto Tracking	N/A	Support, target filtering: human, non-motor vehicle and vehicle
Recognition	N/A	Face Recognition: Max support 16 face libraries, Max supports 100000 faces in face library
Events		
Basic Detection	Motion detection, Ultra motion detection, Tampering alarm, Audio detection	Motion detection, Ultra motion detection, Tampering alarm, Audio detection, Object removed, Object Left Behind
General Function	Watermark, IP address filtering, Alarm input, Alarm output, Access policy, ARP protection, RTSP authentication, User authentication, HTTP authentication	
PTZ		
Pan Range	N/A	0° to 360°
Pan Speed	N/A	0.1°/s to 288°/s
Tilt Range	N/A	-15° to 90°
Tilt Speed	N/A	0.1°/s to 200°/s
Number of Presets	N/A	1024
Preset Patrol	N/A	16 patrols, up to 64 presets for each patrol
Preset Image Freeze	N/A	Support
Home Position	N/A	Support
3D Positioning	N/A	Support
Number of Patrol	N/A	16
Snow Removal Mode	N/A	Support
Patrol Recording	N/A	Support
Storage		
Edge Storage	MicroSD, up to 512 GB	
Network Storage	ANR, NAS (NFS)	
Network		
Protocols	SSH, IGMP, RTP, RTCP, SMTP, IPv4, IPv6, ICMP, ARP, TCP, UDP, DHCP, PPPoE, RTSP, RTMP, DNS, DDNS, NTP, UPnP, HTTP, 802.1x, SNMP, QoS, SSL/TLS, HTTPS, FTP	
Compatible Integration	ONVIF (Profile S, Profile G, Profile T, Profile M), API, SDK	
User/Host	Up to 32 users. 2 user levels: administrator and common user	
Security	TLS 1.3, Password protection, Strong Password, HTTPS encryption, Export operation logs, Basic and Digest Authentication for RTSP, Digest Authentication for HTTP, TLS 1.2, WSSE and Digest Authentication for ONVIF	

Client	EZStation, UNV-Link, UNV-Link Pro	
Web Browser	Plug-in required live view: IE 10+, Chrome 45+, Firefox 52+, Edge 79+	
Interface		
Alarm I/O	7/3	
Audio I/O	2 Input: impedance 1 kΩ, amplitude 2.5 V [p-p], 2 Output: impedance 600 Ω, amplitude 2.5 V [p-p]	
Serial Port	1 × RS485	
Built-in Speaker	Built-in two speakers	
Network	1 × RJ45 1000 M Base-TX Ethernet	
Certification		
EMC	UL (UL 62368-1) CUL (CAN/CSA C22.2 No. 62368-1) CE-LVD (EN IEC 62368-1)	
Safety	UL (UL 62368-1; CAN/CSA C22.2 No. 62368-1) CE LVD (EN IEC 62368-1)	
Environment	CE-RoHS (2011/65/EU; (EU) 2015/863) WEEE (2012/19/EU)	
Protection	IP67 (IEC 60529) IK10 (IEC 62262, Anti-Vandalism Except for the Front Window)	
General		
Power	DC 24 V (±25%), DC 36 V (±25%)	
Power Consumption	Max. 135 W	
Power Interface	Wires with cold-pressed terminal	
Dimensions	Φ380mm * 436.6mm	
Weight	12.5 kg	
Working Environment	-40 ℃ to 70 ℃ (-40 ℉ to 158 ℉), Humidity: ≤ 95% RH (non-condensing)	
Storage Environment	-40 ℃ to 70 ℃ (-40 ℉ to 158 ℉), Humidity: ≤ 95% RH (non-condensing)	
Surge Protection	6 KV	
Web Client Language	22 Languages: Traditional Chinese, English, Simplified Chinese, Polish, German, Russian, French, Korean, Dutch, Czech, Portuguese (Europe), Portuguese (Brazil), Japanese, Thai, Turkish, Spanish (Latin America), Spanish (Europe), Hungarian, Italian, Vietnamese, Arabic, Slovak	
Wiper	N/A	Manual

Dimensions

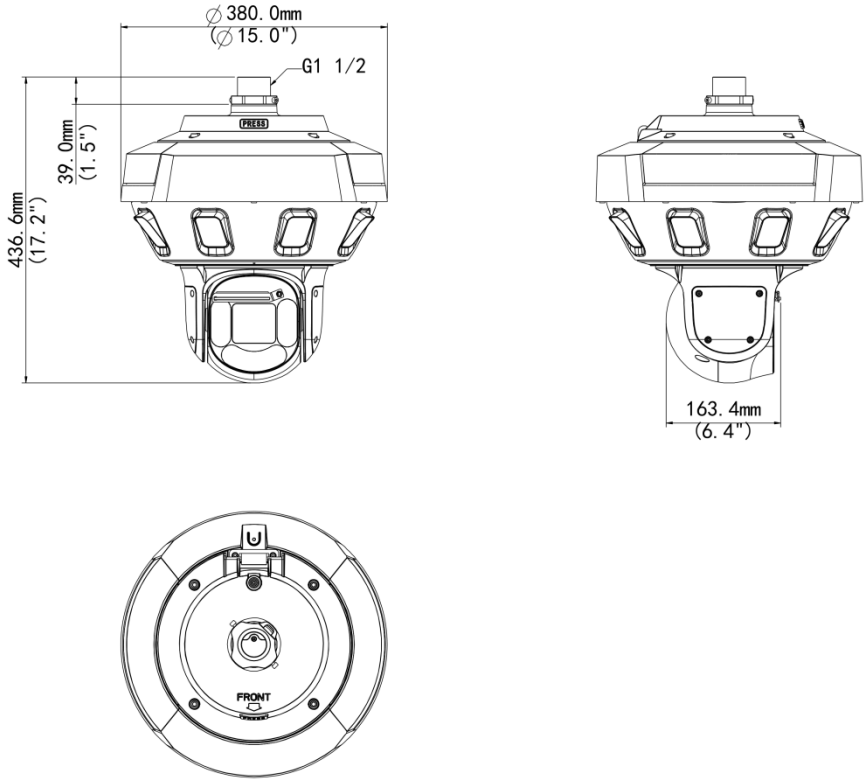

Accessories

TR-UP08M-A-IN

Tiangong Integrated Machine Pole Mounting Bracket



TR-CE45-S-IN

Tiangong Integrated Machine Pendent Mounting Bracket



TR-WE45-S-IN

Tiangong Integrated Machine Wall Mount Bracket

