8MP LightHunter Fixed IR Bullet Analog Camera

UAC-B128-ADF28(40)MS

Overview

UAC-B128-ADF28(40)MS is a 8MP LightHunter fixed IR bullet analog camera with a high-performance 1/2.7-inch CMOS sensor and 3D noise reduction technology. It supports flexible switch among TVI/CVI/AHD/CVBS through DIP switches, effectively enhancing product adaptability and diversity of networking solutions. With SYV-75-3 or other coaxial cable types, the camera can achieve low-cost, long-distance, and anti-interference mega-pixel HD video transmission without time delay. It supports IR-cut filter with auto-switch (ICR) and provides color images at daytime and black/white images at night. The camera also supports audio input and synchronous transmission of audio and video.

Features

- High quality imaging with 8MP resolutionTVI/AHD/CVI/CVBS
- Supports IR-cut filter with auto-switch (ICR)
- LightHunter monitoring with high-sensitivity sensor
- 3D noise reduction technology delivers clean and sharp images
- Supports 180° horizontal flip, 180° vertical flip
- OSD configuration menu, easy to operate
- IP67 waterproof and dustproof design, high reliability
- OSD configuration menu in 11 languages
- Built-in microphone for high quality audio transmission via coaxial cables
- 120dB true WDR technology enables clear image in strong light scene

Specifications

Model	UAC-B128-ADF28MS	UAC-B128-ADF40MS
Camera		
Max Resolution	8 MP	
Sensor Size	1/2.7" CMOS	
Min. Illumination	0.005 lux (F1.6, AGC ON) 0 lux (IR ON)	
Lens		
Focus	2.8 mm	4.0 mm
Lens Mount	M12	
Angle of View (H)	109.1°	86.8°
Angle of View (V)	61.0°	49.4°
Angle of View (D)	126.7°	99.9°
Illuminator		
Illuminator Number	Two IR illuminators	
Illumination Distance	40m	
Lifetime	≥ 60000 hours	
Video		
Resolution	4K: 3840(H) × 2160(V) 5MP@20fps: 2592(H)×1944(V); 4MP: 2560(H)×1440(V)	
Frame Rate	CVI: 4K@15fps (default), 5MP@20fps, 4MP@25fps, 4MP@30fps TVI/AHD: 4K@15fps, 5MP@20fps, 4MP@25fps, 4MP@30fps CVBS: PAL, NTSC	
Shutter Time	PAL: 1/25s-1/50000s， NTSC: 1/30s-1/50000s	
Image		
Exposure Mode	Four modes: Global (default), BLC, HLC, WDR	
Day/Night	Three modes: Auto (default), Day, Night	
Digital Noise Reduction	2D/3D	
White Balance	Two modes: Auto (default), Manual	
WDR	120 dB WDR	
Smart IR	Support	
Flip	Supports 180°horizontal flip, 180°vertical flip	
Digital Defog	N/A	
Audio		
Built-in Mic	Support	
Camera Audio	CVI: 4K@15fps, 5MP@20fps, 4MP@25fps, 4MP@30fps	
Interface		
Power Interface	5.5 mm Power Interface	
Video Output	BNC, supports TVI/AHD/CVI/CVBS	
Operating Environment		

Temperature	-30 ℃ to 60 ℃ (-22 ℉ to 140 ℉)
Humidity	≤ 95% RH (non-condensing)
Surge Protection	4kV for power&4kV for video output interfaces
General	
Power	DC 12 V ± 25%
Power Consumption	MAX 4.8W
Mount	Corner Mount&Pole Mount
Dimensions	157mm*67mm*66mm (L*W*H)
Material	Metal
Weight	300g(0.67lb)
OSD Menu Language	11 Languages: English, German, Spanish (Latin America), French, Italian, Japanese, Korean, Polish, Portuguese (Brazil), Russian, Turkish
Certification	
EMC	CE-EMC (EN 55032, EN 61000-3-3, EN IEC 61000-3-2, EN 55035), FCC (FCC 47 CFR part15 B)
Safety	CE-LVD (EN 62368-1)
Environment	CE-RoHS (2011/65/EU; (EU) 2015/863); WEEE (2012/19/EU)
Protection	IP67 (IEC 60529)

Dimensions

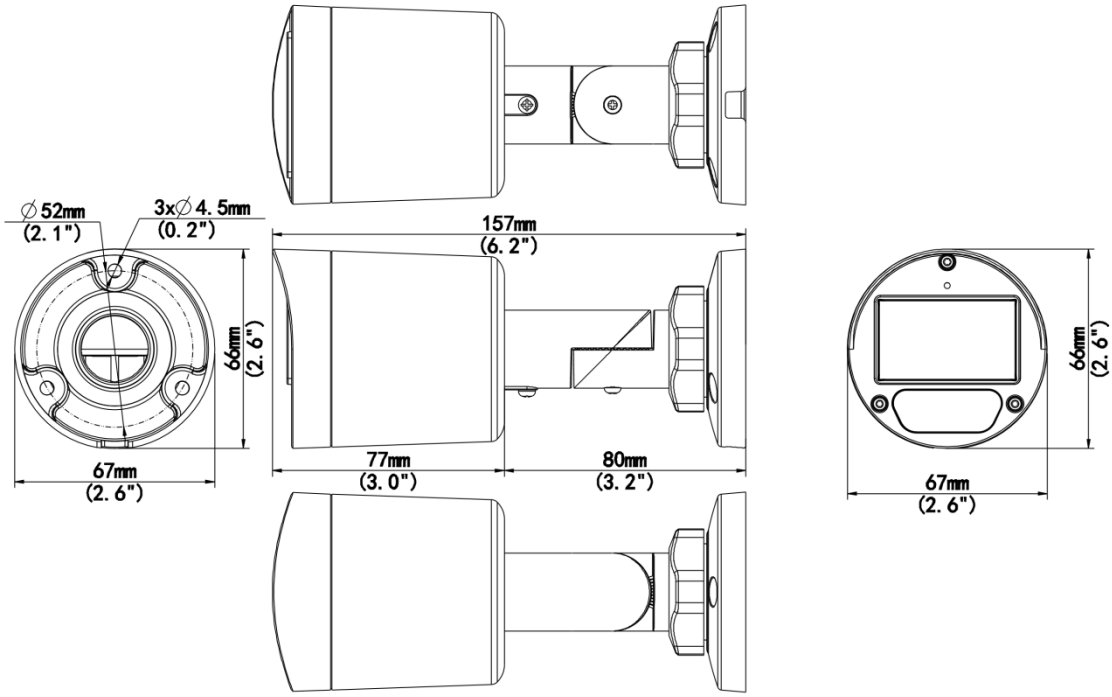

Accessories

TR-A01-IN NPT 3/4'' Waterproof Cable Gland	**TR-JB05-B-IN** Small Bullet Junction Box(Elegant White)	**TR-UP06-C-IN-V2** Pole Mounting Bracket For Bullet Junction Box Only
TR-UC08-C-V2 Bullet&Dome Corner Mounting Bracket	**PWR-DC1201A-UK** DC12V/1A Wall Plug British Standard Power Adapter	**PWR-DC1201B-UK** DC12V/1A Wall Plug British Standard Power Adapter(Colorful Bag)
PWR-DC1201A-US DC12V/1A Wall Plug American Standard Power Adapter	**PWR-DC1201B-US** DC12V/1A Wall Plug American Standard Power Adapter(Colorful Bag)	**PWR-DC1201A-EU** DC12V/1A Wall Plug European Standard Power Adapter
PWR-DC1201B-EU DC12V/1A Wall Plug European Standard Power Adapter(Colorful Bag)	**PWR-DC1201A-IND** DC12V/1A Wall Plug Indian Standard Power Adapter-Colorful Bag	

Unlimited New View

Zhejiang Uniview Technologies Co., Ltd.

http://www.uniview.com

overseasbusiness@uniview.com; globalsupport@uniview.com

No. 369, Xietong Road, Xixing Sub-district, Binjiang District, Hangzhou City, 310051, Zhejiang Province, China

©2023-2026 Zhejiang Uniview Technologies Co., Ltd. All rights reserved.

*Product specifications and availability are subject to change without notice.

Despite our best efforts, technical or typographical errors may exist in this document. Uniview cannot be held responsible for any such errors and reserves the right to change the contents of this document without prior notice.