## 8MP Fixed Intelligent Dual light Turret Network Camera

# IPC3618SB-ADF28(40)KM-DL-I1

## Features

- High quality image with 8 MP, 1/2.7" CMOS sensor
- 8 MP (3840 × 2160)@25/24 fps; 5 MP (3072 × 1728)@30/25 fps; 4 MP (2560 × 1440)@30/25 fps; 1080P (1920 × 1080)@30/25 fps
- Ultra 265, H.265, H.264, MJPEG
- Smart intrusion prevention, including cross line, intrusion, enter area, leave area detection
- Intelligent intrusion prevention system based on target classification significantly reduces false alarms caused by leaves, birds, and lights, accurately focusing on humans, vehicles, and non-motor vehicles
- Support ultra motion detection
- Intelligent people flow counting and crowd density monitoring
- 120 dB true WDR technology enables clear image in strong light scene
- Supports 9:16 corridor mode
- MicroSD, up to 1 TB
- IP67 protection

# Specifications

| Model | IPC3618SB-ADF28KM-DL-I1 | IPC3618SB-ADF40KM-DL-I1 |
|---|---|---|
| Camera | | |
| Max Resolution | 8 MP | |
| Sensor | 1/2.7" CMOS | |
| Min. Illumination | Color: 0.002 Lux (F1.6, AGC ON), 0 Lux with light | |
| Day/Night | IR-cut filter with auto switch (ICR) | |
| Shutter | Auto/Manual, 1 to 1/100000 s | |
| Adjustment Angle | Pan: 0° to 360°, Tilt: 0° to 80°, Rotate: 0° to 360° | |
| S/N | > 52 dB | |
| WDR | 120 dB | |
| Lens | | |
| Focal Length | 2.8 mm | 4.0 mm |
| Iris | F1.6 | |
| Field of View (H) | 108.6° | 89.2° |
| Field of View (V) | 61.1° | 48.1° |
| Field of View (D) | 125.7° | 106.1° |
| Lens Type | Fixed | |
| Iris Type | Fixed | |
| DORI | | |
| DORI Distance (Lens) | 2.8 mm | 4.0 mm |
| DORI Distance (Detect) | 84.0 m (275.6 ft.) | 120.0 m (393.7 ft.) |
| DORI Distance (Observe) | 33.6 m (110.2 ft.) | 48.0 m (157. 5 ft.) |
| DORI Distance (Recognize) | 16.8 m (55.1 ft.) | 24.0 m (78.7 ft.) |
| DORI Distance (Identify) | 8.4 m (27.6 ft.) | 12.0 m (39.4 ft.) |
| Illuminator | | |
| Illumination Distance (Warm Light) | 30 m (98.4 ft.) | |
| Illumination Distance (IR) | 30 m (98.4 ft.) | |
| Wavelength | 850 nm | |
| Light On/Off Control | Auto/Manual | |
| Video | | |
| Video Compression | Ultra 265, H.265, H.264, MJPEG | |
| H.264 Code Profile | Baseline profile, Main profile, High profile | |
| Frame Rate | Main Stream: 8 MP (3840 × 2160), max. 25 fps; 5 MP (3072 × 1728), max. 30 fps; 4 MP (2560 × 1440), max. 30 fps; 1080P (1920 × 1080), max. 30 fps;720P (1280 × 720), max. 30 fps;<br>Sub Stream: 1080P (1920 × 1080), max. 30 fps; 720P (1280 × 720), max. 30 fps; D1 (720 × 576), max. 30 fps; 640 × 360, max. 30 fps; 2CIF (704 × 288), max. 30 fps; CIF (352 × 288), max. 30 fps;<br>Third Stream: D1 (720 × 576), max. 30 fps; 640 × 360, max. 30 fps; 2CIF (704 × 288), max. 30 fps; CIF (352 × 288), max. 30 fps; | |
| Video Bit Rate | 128 Kbps to 16 Mbps | |
| U-code | Support | |

| | |
|---|---|
| OSD | Up to 8 OSDs |
| Privacy Mask | Up to 4 areas |
| ROI | Support |
| Video Stream | Triple streams |
| Image | |
| White Balance | Auto, Outdoor, Fine tune, Sodium lamp, Locked, Auto2, Area white balance |
| Smart IR | Support |
| Digital Noise Reduction | 2D/3D DNR |
| Flip | Normal, Flip vertical, Flip horizontal, 180°, 90° Clockwise, 90° Anti-clockwise |
| Dewarping | Support |
| HLC | Support |
| BLC | Support |
| Defog | Digital defog |
| Intelligent | |
| Smart Intrusion Prevention | Cross line detection, intrusion detection, enter area detection, leave area detection (support false alarm filtering and the classification of human, non-motor vehicle and vehicle) |
| People Counting | Support people flow counting and crowd density detection |
| Events | |
| Basic Detection | Motion detection, Ultra motion detection, Tampering alarm, Audio detection |
| General Function | Watermark, IP address filtering, Access policy, ARP protection, RTSP authentication, User authentication, HTTP authentication |
| Audio | |
| Audio Compression | G.711U, G.711A, AAC-LC |
| Audio Bitrate | G.711U/G.711A: 64 kbps, AAC-LC: 128 kbps |
| Two-way Audio | N/A |
| Suppression | Support |
| Sampling Rate | G.711U/G.711A: 8 kHz, AAC-LC: 8 kHz, 16 kHz, 48 kHz |
| Storage | |
| Edge Storage | MicroSD, up to 1 TB |
| Network Storage | ANR, NAS (NFS) |
| Network | |
| Protocols | IGMP, SMTP, IPv6, ICMP, ARP, TCP, UDP, DHCP, PPPoE, RTSP, DNS, DDNS, NTP, UPnP, HTTP, 802.1x, SNMP, SSL/TLS, IPv4, RTP, RTCP, RTMP, HTTPS, FTP, QoS |
| Compatible Integration | ONVIF (Profile S, Profile G, Profile T, Profile M), API, SDK |
| User/Host | Up to 32 users. 2 user levels: administrator and common user |
| Security | Password protection, Strong Password, HTTPS encryption, Export operation logs, Basic and Digest Authentication for RTSP, Digest Authentication for HTTP, TLS 1.2, WSSE and Digest Authentication for ONVIF, DTLS 1.2 |
| Client | EZStation, APP |
| Web Browser | Plug-in required live view: IE 10+, Chrome 45+, Firefox 52+, Edge 79+, Plug-in free live view: Chrome 57+, Firefox 58+, Edge 16+ |
| Interface | |
| Audio I/O | N/A |

| | |
|---|---|
| Alarm I/O | N/A |
| Serial Port | N/A |
| Built-in Mic | Support |
| Built-in Speaker | N/A |
| WIFI | N/A |
| Network | 1 × RJ45 10 M/100 M Base-TX Ethernet |
| Video Output | N/A |
| Certification | |
| EMC | CE-EMC (EN 55032, EN 61000-3-3, EN IEC 61000-3-2, EN 50130-4)<br>FCC (FCC 47 CFR part15 B) |
| Safety | CE-LVD (EN 62368-1)<br>UL/CUL (UL 62368-1, CAN/CSA C22.2 No. 62368-1) |
| Environment | CE-RoHS (2011/65/EU ; (EU) 2015/863) ; WEEE (2012/19/EU) |
| Protection | IP67 (IEC 60529) |
| General | |
| Power | DC 12 V±25%, PoE (IEEE 802.3af) |
| Power Consumption | Max. 6.2 W |
| Power Interface | Ø5.5 mm coaxial power plug |
| Dimensions | Ø110.5 mm × 97.5 mm (Ø4.4" × 3.8") (Ø × H) |
| Weight | 0.46 kg (1.01 lb.) |
| Working Environment | -30 ℃ to 60 ℃ (-22 ℉ to 140 ℉), Humidity: ≤ 95% RH (non-condensing) |
| Storage Environment | -30 ℃ to 60 ℃ (-22 ℉ to 140 ℉), Humidity: ≤ 95% RH (non-condensing) |
| Surge Protection | 4 KV |
| Reset Button | Support |
| Material | Metal |
| RTC | Support |
| Web Client Language | 20 Languages: Traditional Chinese, English, Simplified Chinese, Polish, German, Russian, French, Korean, Dutch, Czech, Portuguese (Europe), Portuguese (Brazil), Japanese, Thai, Turkish, Spanish (Latin America), Spanish (Europe), Hungarian, Italian, Vietnamese |

# Dimensions

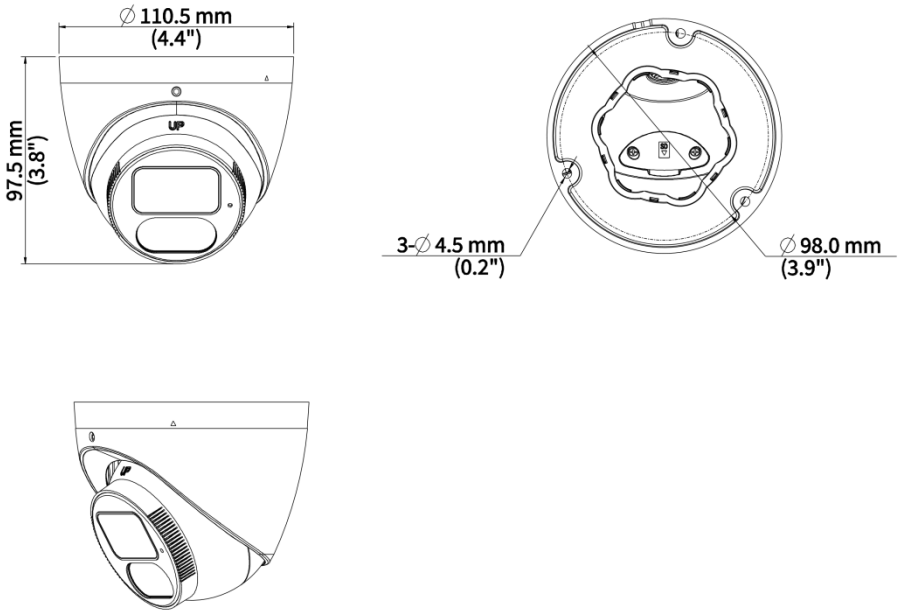


# Accessories

| TR-JB03-G-IN | TR-JB07/WM03-G-IN-V2 | TR-WM03-D-IN-V2 |
|---|---|---|
| Mini Dome Junction Box(Support Wiring From Behind) | Wall Mounting Assembling Bracket For Dome&Mini Dome&Plastic Turret Camera | Wall Mounting Bracket For Dome&Mini Dome&Plastic Turret Camera |
| | | |
| **TR-UM06-E-IN** | **TR-A01-IN** | **TR-UP06-C-IN-V2** |
| Slant Mounting Bracket For Fixed Dome | NPT 3/4'' Waterproof Cable Gland | Pole Mounting Bracket For Bullet Junction Box Only |
| | | |

| TR-UC08-C-V2<br>Bullet&Dome Corner Mounting Bracket | TR-SE24-IN<br>Dome Pendent Mounting Pole 200mm | TR-SE24-A-IN<br>Dome Pendent Mounting Pole 500mm |
|---|---|---|
| | |  |
| **TR-CM24-IN**<br>Dome Pendent Mounting Bracket(Indoor) | | |
| | | |

# Unlimited New View

**Zhejiang Uniview Technologies Co., Ltd.**

http://www.uniview.com

overseasbusiness@uniview.com; globalsupport@uniview.com

No. 369, Xietong Road, Xixing Sub-district, Binjiang District, Hangzhou City, 310051, Zhejiang Province, China

©2025-2026 Zhejiang Uniview Technologies Co., Ltd. All rights reserved.

*Product specifications and availability are subject to change without notice.

Despite our best efforts, technical or typographical errors may exist in this document. Uniview cannot be held responsible for any such errors and reserves the right to change the contents of this document without prior notice.