4MP 25X LightHunter Network PTZ Dome Camera

IPC6424SR-X25-VF

Features

- High quality image with 4 MP, 1/2.8" CMOS sensor
- 2688 × 1520@30 fps in the main stream
- Ultra 265, H.265, H.264, MJPEG
- Triple streams
- 25X optical zoom
- Smart intrusion prevention, supports false alarm filtering, including cross line, intrusion, enter area, leave area detection
- automatic selection of best snapshots, supports face detection masked area
- People counting, supports people flow counting and crowd density monitoring, suitable for different statistical scenarios
- LightHunter technology ensures ultra-high image quality in low illumination environment
- Smart IR, up to 100 m (328 ft) IR distance
- DC 12 V±25%, PoE+ (IEEE 802.3at)
- Alarm I/O: 2/1, audio I/O: 1/1
- IP67 ingress protection
- IK10 vandal resistant

Specifications

Model	IPC6424SR-X25-VF
Camera	
Sensor	1/2.8" CMOS
Min. Illumination	Color: 0.003 Lux (F1.5, AGC ON), 0 Lux with IR
Day/Night	IR-cut filter with auto switch (ICR)
Shutter	Auto/Manual, 1 ~ 1/100000s
WDR	120 dB
S/N	>56 dB
Lens	
Focal Length	4.8 to 120 mm
Digital Zoom	16X
Optical Zoom	25X
Iris	F1.5 to F3.8
Field of View (H)	52.20° to 2.74°
Field of View (V)	30.81° to 1.54°
Field of View (D)	64.20° to 3.23°
DORI	
DORI Distance (Lens)	4.8 to 120 mm
DORI Distance (Detect)	119.3 m to 2475.0 m (391.2 ft. to 8120.1 ft.)
DORI Distance (Observe)	47.7 m to 990.0 m (156.5 ft. to 3248.0 ft.)
DORI Distance (Recognize)	23.9 m to 495.0 m (78.2 ft. to 1624.0 ft.)
DORI Distance (Identify)	11.9 m to 247.5 m (39.1 ft. to 812.0 ft.)
Video	
Privacy Mask	24 areas, up to 4 areas per scene
Video Compression	Ultra 265, H.265, H.264, MJPEG
Frame Rate	Main Stream: 4 MP (2688 × 1520), max. 30 fps Sub Stream: 1080P (1920 × 1080), max. 30 fps Third Stream: D1 (720 × 576), max. 30 fps
Video Bit Rate	128 Kbps to 16 Mbps
U-code	Support
ROI	Support
Video Stream	Triple streams
OSD	Up to 10 OSDs
Intelligent	
Auto Tracking	Support, target filtering: human, non-motor vehicle and vehicle
Smart Intrusion Prevention	Cross line detection, intrusion detection, enter area detection, leave area detection (support false alarm filtering and the classification of human, non-motor vehicle and vehicle)
People Counting	Support people flow counting and crowd density monitoring
Image	
White Balance	Auto, Outdoor, Fine tune, Sodium lamp, Locked, Auto2
Digital Noise Reduction	2D/3D DNR

Flip	Normal, Flip vertical, Flip horizontal, 180°
HLC	Support
BLC	Support
Smart IR	Support
Defog	Digital defog
Heatwave Reduction	Support
Events	
Basic Detection	Motion detection, Tampering alarm, Audio detection, Object removed, Object Left Behind
General Function	Watermark, IP address filtering, Access policy, ARP protection, RTSP authentication, User authentication, Alarm input, Alarm output
Audio	
Audio Compression	G.711U, G.711A
Audio Bitrate	128 Kbps
Two-way Audio	Support
Suppression	Support
Sampling Rate	16KHZ
Storage	
Edge Storage	MicroSD, up to 512 GB
Network Storage	ANR, NAS (NFS)
Illuminator	
IR On/Off Control	Auto/Manual
Wavelength	850 nm
Illumination Distance (IR)	100 m (328.1 ft.)
Network	
Protocols	SSH, IGMP, RTP, RTCP, SMTP, IPv4, IPv6, ICMP, ARP, TCP, UDP, DHCP, PPPoE, RTSP, RTMP, DNS, DDNS, NTP, FTP, UPnP, HTTP, HTTPS, 802.1x, SNMP, QoS, SSL/TLS
Compatible Integration	ONVIF (Profile S, Profile G, Profile T, Profile M), API, SDK
User/Host	Up to 32 users. 3 user levels: administrator, common user and operator
Security	TLS 1.3, Password Protection, Strong Password, HTTPS Encryption, Export Operation Logs, Basic and Digest Authentication for RTSP, Digest Authentication for HTTP, TLS 1.2, WSSE and Digest Authentication for ONVIF
Client	EZStation, UNV-Link, UNV-Link Pro
Web Browser	Plug-in required live view: IE 10+, Chrome 45+, Firefox 52+, Edge 79+
PTZ	
Number of Presets	1024
Preset Patrol	16 patrols, up to 64 presets for each patrol
Route Patrol	16 patrols, up to 32 actions for each patrol
Recorded Patrol	16 patrols, up to 128 actions for each patrol
Patrol Stay Time	15 s to 1800 s
Preset Image Freeze	Support
Home Position	Support
Pan Range	360° (endless)
Tilt Range	-15° to 90° (auto flip)

Pan Speed	0.1°/s to 200°/s
Tilt Speed	0.1°/s to 120°/s
Interface	
Audio I/O	1 Input: impedance 1 kΩ, amplitude 2.5 V [p-p], 1 Output: impedance 600 Ω, amplitude 2.5 V [p-p]
Alarm I/O	2/1
Serial Port	1 * RS485
Built-in Mic	N/A
Built-in Speaker	N/A
WIFI	N/A
Network	1 × RJ45 10 M/100 M Base-TX Ethernet
Video Output	1 BNC (for debugging)
Certification	
EMC	CE-EMC (EN 55032: 2015+A1:2020,EN 61000-3-3: 2013+A1: 2019,EN IEC 61000-3-2: 2019+A1: 2021,EN 55035: 2017+A11:2020) FCC (FCC CFR 47 part15 B, ANSI C63.4-2014)
Safety	CE LVD (EN 62368-1:2014+A11:2017) UL (UL 62368-1, 2nd Ed., Issue Date: 2014-12-01)
Environment	CE-ROHS (2011/65/EU;(EU)2015/863)
Protection	IP67 (IEC 60529:1989+AMD1:1999+AMD2:2013) IK10 (IEC 62262:2002)
General	
Power	DC 12 V (±25%,3 A), PoE+ (IEEE 802.3at)
Power Consumption	Max. 21 W
Power Interface	Ø5.5 mm coaxial power plug
Dimensions	Ø162 mm × 293 mm (Ø6.4" × 11.5") (Ø × H)
Weight	3.05 kg (6.72 lb.)
Working Environment	-40 ℃ to 70 ℃ (-40 ℉ to 158 ℉), Humidity: ≤ 95% RH (non-condensing)
Storage Environment	-40 ℃ to 70 ℃ (-40 ℉ to 158 ℉), Humidity: ≤ 95% RH (non-condensing)
Surge Protection	6 KV
Reset Button	Support
Web Client Language	22 Languages: Traditional Chinese, English, Simplified Chinese, Polish, German, Russian, French, Korean, Dutch, Czech, Portuguese (Europe), Portuguese (Brazil), Japanese, Thai, Turkish, Spanish (Latin America), Spanish (Europe), Hungarian, Italian, Vietnamese, Arabic, Slovak
Configurable	
P/N	Support

Dimensions

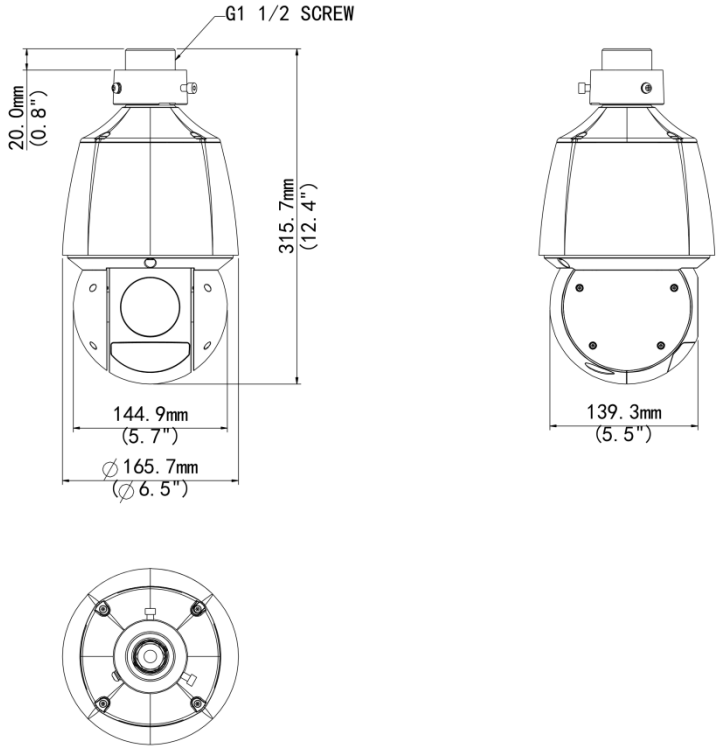

Accessories

TR-UF45-A-IN

Dome Indoor Ceiling Mounting Pedestal

TR-SE45-A-IN

Dome Ceiling Mounting Pole 500

TR-SE45-IN

Dome Ceiling Mounting Pole 200

TR-CE45-IN

Dome Indoor Ceiling Mounting Bracket

TR-WE45-IN

Dome Wall Mounting Bracket

TR-WE45-A-IN

Long Wall Mounting Bracket for Dome

TR-WE45-B-IN

Dome Gooseneck Bracket

TR-JB12-IN

Dome Junction Box

TR-UP08-A-IN

Dome Pole Mounting Bracket

TR-UP08-B-IN

Aluminium Alloy Pole Mounting Bracket

TR-UC08-A-IN

Dome Corner Mounting Bracket

TR-UC08-B-IN

Aluminium Alloy Corner Mounting Bracket

Zhejiang Uniview Technologies Co., Ltd.

http://www.uniview.com

overseasbusiness@uniview.com; globalsupport@uniview.com

No. 369, Xietong Road, Xixing Sub-district, Binjiang District, Hangzhou City, 310051, Zhejiang Province, China

©2023-2025 Zhejiang Uniview Technologies Co., Ltd. All rights reserved.

*Product specifications and availability are subject to change without notice.

*Despite our best efforts, technical or typographical errors may exist in this document.
Uniview cannot be held responsible for any such errors and reserves the right to change the contents of this document without prior notice.