Network Mini Dome Camera

Quick Guide

V2.03

Preface

The content of this section is designed to ensure that users use the product correctly to prevent dangers or property loss caused by improper operation. Before using this product, be sure to read this manual carefully. Please keep this manual properly for future reference.

About This Manual

- We recommend that you use this manual under the guidance of a professional.
- This manual is designed for use with multiple product models, and it is not possible to list the appearance and functions of each product individually. Please refer to the actual product for use.
- This manual is intended for multiple software versions, and the illustrations and descriptions in this manual may be different from the actual GUI and functions of the software.
- Despite our best efforts, technical or typographical errors may exist in this manual. Uniview cannot be held responsible for any such errors and reserves the right to change the manual without prior notice.
- Users are fully responsible for the damages and losses that arise due to improper operation.
- Uniview reserves the right to change any information in this manual without any prior notice or indication. Due to such reasons as product version upgrade or regulatory requirement of relevant regions, this manual will be periodically updated.
- This manual will be updated in real time according to the laws and regulations of the relevant regions. For specific details, please refer to the product's paper copy, QR code, or official website. In case of any discrepancy between the paper copy and the electronic version, the electronic version shall prevail.

About This Product

If the product you have chosen is a video product, please strictly adhere to the applicable laws and regulations. You can visit our official website to inquire about the relevant content.

Instructions for Use

- This document serves as a guide for use only. All statements, information, and suggestions contained in this document do not constitute any express or implied warranty.
- We assume no responsibility for any special, incidental, consequential, or indirect damages resulting from the use of this manual or the use of our products, including but not limited to losses due to loss of business profits, data or document loss, and product malfunction or information leakage caused by cyber-attack, hacker attack, and virus infections.
- Due to uncertain factors such as the physical environment, there may be discrepancies between the actual values of some data and the reference values provided in the manual. In case of any questions or disputes, the company's final interpretation shall prevail.

Formatting Conventions

The UI formatting conventions used in this document are as follows:

Format	Meaning
Bold	Bold means UI elements (button names, menu names, window names, etc.), e.g., Click **Save**.
>	Indicate a sequence of actions, e.g., click Device Management > Add Device, which means first click Device Management, and then click Add Device.

Symbol Conventions

This document uses various distinctive symbols to highlight areas that require special attention during the operation process. The meanings of these symbols are as follows:

Symbol	Meaning
	NOTE: Provides tips and additional information related to the operation and use of the product.
	CAUTION: Alerts to matters that requires attention during operation, as improper handling may lead to product damage, data loss, or functional abnormalities.
	WARNING: The annotations following this symbol demand extra attention, as improper handling could potentially cause personal injury.

Legal Statement

Copyright Statement

©2025-2026 Zhejiang Uniview Technologies., Co Ltd. All rights reserved.

All parts of this document, including but not limited to text, images, and graphics, are copyrighted and belong to Zhejiang Uniview Technologies Co Ltd (hereinafter referred to as “Uniview” "we" “us”). Without our written permission, no organization or individual may excerpt, copy, translate, modify, or disseminate any part or all of the content of this manual in any form.

The products described in this manual may contain software copyrighted by us and any potential licensors. Without the permission of the relevant rights holders, no one may copy, distribute, modify, excerpt, decompile, disassemble, decrypt, reverse engineer, rent, transfer, sublicense, or engage in any other actions that infringe upon the software copyright in any form.

Trademark Acknowledgements

unv uniarch are trademarks or registered trademarks of Uniview.

HEVC Advance™

All other trademarks, products, services and companies in this manual or the product described in this manual are the property of their respective owners.

Export Compliance Statement

Uniview complies with applicable export control laws and regulations worldwide, including that of the People's Republic of China and the United States, and abides by relevant regulations relating to the export, re-export and transfer of hardware, software and technology. Regarding the product described in this manual, Uniview asks you to fully understand and strictly abide by the applicable export laws and regulations worldwide.

EU Authorised Representative

UNV Technology EUROPE B.V. Treubstraat 1, 2288 EG, Rijswijk, the Netherlands.

If you have any feedback, please contact us at service@uniview.com.

Disclaimer of Liability

- We assume no responsibility and offer no compensation for any special, incidental, consequential, or indirect damages resulting from the use of this manual or our products, including but not limited to losses related to lost business profits, data, or document loss.
- The product described in this manual is provided on an "as is" basis. Unless required by applicable law, this manual is only for informational purpose, and all statements, information, and recommendations in this manual are presented without warranty of any kind, expressed or implied,

including, but not limited to, merchantability, satisfaction with quality, fitness for a particular purpose, and noninfringement.

- Users must assume total responsibility and all risks for connecting the product to the Internet, including, but not limited to, network attack, hacking, and virus. Uniview strongly recommends that users take all necessary measures to enhance the protection of network, device, data and personal information. Uniview disclaims any liability related thereto but will readily provide necessary security related support.
- To the extent not prohibited by applicable law, in no event will Uniview and its employees, licensors, subsidiary, affiliates be liable for results arising out of using or inability to use the product or service, including, not limited to, loss of profits and any other commercial damages or losses, loss of data, procurement of substitute goods or services; property damage, personal injury, business interruption, loss of business information, or any special, direct, indirect, incidental, consequential, pecuniary, coverage, exemplary, subsidiary losses, however caused and on any theory of liability, whether in contract, strict liability or tort (including negligence or otherwise) in any way out of the use of the product, even if Uniview has been advised of the possibility of such damages (other than as may be required by applicable law in cases involving personal injury, incidental or subsidiary damage).
- To the extent allowed by applicable law, in no event shall Uniview's total liability to you for all damages for the product described in this manual (other than as may be required by applicable law in cases involving personal injury) exceed the amount of money that you have paid for the product.
- When using this product, please strictly adhere to the applicable laws and regulations to avoid infringing upon the rights of third parties, including but not limited to intellectual property rights, data rights, or other privacy rights. You must also not use this product for the purposes of developing or facilitating the use of weapons of mass destruction, biological or chemical weapons, nuclear weapons, or for any other purposes that violate international norms and regulations.

Privacy Protection Reminder

Uniview complies with appropriate privacy protection laws and is committed to protecting user privacy. You may want to read our full privacy policy at our website and get to know the ways we process your personal information. Please be aware, using the product described in this manual may involve the collection of personal information such as face, fingerprint, license plate number, email, phone number, GPS. Please abide by your local laws and regulations while using the product.

Safety Precautions

The device must be installed, serviced and maintained by a trained professional with necessary safety knowledge and skills. Before you start using the device, please read through this guide carefully and make sure all applicable requirements are met to avoid danger and loss of property.

Storage, Transportation, and Use

- Store or use the device in a proper environment that meets environmental requirements, including and not limited to, temperature, humidity, dust, corrosive gases, electromagnetic radiation, etc.
- Make sure the device is securely installed or placed on a flat surface to prevent falling.
- Unless otherwise specified, do not stack devices.
- Ensure good ventilation in the operating environment. Do not cover the vents on the device. Allow adequate space for ventilation.
- Protect the device from liquid of any kind.
- Make sure the power supply provides a stable voltage that meets the power requirements of the device. Make sure the power supply's output power exceeds the total maximum power of all the connected devices.
- Verify that the device is properly installed before connecting it to power.
- Do not remove the seal from the device body without consulting Uniview first. Do not attempt to service the product yourself. Contact a trained professional for maintenance.
- Always disconnect the device from power before attempting to move the device.

- Take proper waterproof measures in accordance with requirements before using the device outdoors.

Power Requirements

- Install and use the device in strict accordance with your local electrical safety regulations.
- Use a UL certified power supply that meets LPS requirements if an adapter is used.
- Use the recommended cordset (power cord) in accordance with the specified ratings.
- Only use the power adapter supplied with your device.
- Use a mains socket outlet with a protective earthing (grounding) connection.
- Ground your device properly if the device is intended to be grounded.

Battery Safety

Please use batteries properly; otherwise, there is a risk of fire or explosion.

- Warning: Using incorrect battery models can lead to explosion.
- If you need to replace the battery, it is recommended that you go to an authorized service center or have it replaced under professional supervision. We shall not be held responsible for any issues arising from unauthorized battery replacement.
- When replacing the battery, be sure to use a battery of the same type as the original! Using the wrong model for replacement (such as certain types of lithium batteries) may cause safety protection to fail.
- Batteries must not be exposed to overheat environments such as sunlight, fire, as this may lead to fire, explosion, or combustion.
- Do not dispose of batteries in fire or heating appliances. Do not squeeze, bend, or cut batteries, as it may cause explosion.
- Do not expose batteries to extremely high or low temperatures, or to very low-pressure environments, as this may cause explosion or leakage of flammable liquid/gas.
- Disposal of the used battery according to your local regulations or the battery manufacturer's instructions.
- For products or the included remote control containing a button cell battery: Do not ingest the battery - chemical burn hazard! If swallowed, a button cell battery can cause severe internal burns within 2 hours and may be fatal. Precautions (including but not limited to):
  - Keep new and used batteries away from children.
  - Stop using the product and keep it away from children if the battery compartment is not securely closed.
  - If you suspect that a battery may have been swallowed or inserted inside any part of the body, seek immediate medical attention.

Network Security

Please take all necessary measures to enhance network security for your device.

The following are necessary measures for the network security of your device:

- Change default password and set strong password: You are strongly recommended to change the default password after your first login and set a strong password of at least nine characters including all three elements: digits, letters and special characters.
  - Do not include the account name or the reverse of the account name.
  - Avoid using consecutive characters, such as 123, abc, etc.
  - Do not use overlapping characters, such as 111, aaa, etc.
- Keep firmware up to date: It is recommended that your device is always upgraded to the latest version for the latest functions and better security. Visit Uniview's official website or contact your local dealer for the latest firmware.

The following are recommendations for enhancing network security of your device:

- Change password regularly: Change your device password on a regular basis and keep the password safe. Make sure only the authorized user can log in to the device.
- Enable HTTPS/SSL: Use SSL certificate to encrypt HTTP communications and ensure data security.
- Enable IP address filtering: Allow access only from the specified IP addresses.

- **Minimum port mapping:** Configure your router or firewall to open a minimum set of ports to the WAN and keep only the necessary port mappings. Never set the device as the DMZ host or configure a full cone NAT.
- **Disable the automatic login and save password features:** If multiple users have access to your computer, it is recommended that you disable these features to prevent unauthorized access.
- **Choose username and password discretely:** Avoid using the username and password of your social media, bank, email account, etc., as the username and password of your device, in case your social media, bank and email account information is leaked.
- **Restrict user permissions:** If more than one user needs access to your system, make sure each user is granted only the necessary permissions.
- **Disable UPnP:** When UPnP is enabled, the router will automatically map internal ports, and the system will automatically forward port data, which results in the risks of data leakage. Therefore, it is recommended to disable UPnP if HTTP and TCP port mapping have been enabled manually on your router.
- **Multicast:** Multicast is intended to transmit video to multiple devices. If you do not use this function, it is recommended you disable multicast on your network.
- **Check logs:** Check your device logs regularly to detect unauthorized access or abnormal operations.
- **Isolate video surveillance network:** Isolating your video surveillance network with other service networks helps prevent unauthorized access to devices in your security system from other service networks.
- **Physical protection:** Keep the device in a locked room or cabinet to prevent unauthorized physical access.
- **SNMP:** Disable SNMP if you do not use it. If you do use it, then SNMPv3 is recommended.

Learn More

You may also obtain security information under Security Response Center at Uniview's official website.

Avertissement de l'utilisation de la batterie

- Lorsque utiliser la batterie, évitez:
  - Température et pression d'air extrêmement élevées ou basses pendant l'utilisation, le stockage et le transport.
  - Remplacement de la batterie.
- Utilisez la batterie correctement. Mauvaise utilisation de la batterie comme celles mentionnées ici, peut entraîner des risques d'incendie, d'explosion ou de fuite liquide de gaz inflammables.
  - Remplacer la batterie par un type incorrect;
  - Disposer d'une batterie dans le feu ou un four chaud, écraser mécaniquement ou couper la batterie;
- Disposer la batterie utilisée conformément à vos règlements locaux ou aux instructions du fabricant de la batterie.

Regulatory Compliance

FCC Statements

This device complies with Part 15 of the FCC Rules. Operation is subject to the following two conditions: (1) this device may not cause harmful interference, and (2) this device must accept any interference received, including interference that may cause undesired operation.

Visit https://global.uniview.com/Support/Download_Center/Product_Installation/Declaration/ for SDoC.

Caution: The user is cautioned that changes or modifications not expressly approved by the party responsible for compliance could void the user's authority to operate the equipment.

NOTE: This equipment has been tested and found to comply with the limits for a Class A digital device, pursuant to part 15 of the FCC Rules. These limits are designed to provide reasonable protection against harmful interference when the equipment is operated in a commercial environment. This equipment generates, uses, and can radiate radio frequency energy and, if not installed and used in accordance with the instruction manual, may cause harmful interference to radio communications. Operation of this

equipment in a residential area is likely to cause harmful interference in which case the user will be required to correct the interference at his own expense.

LVD/EMC Directive

This product complies with the European Low Voltage Directive 2014/35/EU and EMC Directive 2014/30/EU.

WEEE Directive–2012/19/EU



The product this manual refers to is covered by the Waste Electrical & Electronic Equipment (WEEE) Directive and must be disposed of in a responsible manner.

Battery Regulation- (EU) 2023/1542



Battery in the product complies with the European Battery Regulation (EU) 2023/1542. For proper recycling, return the battery to your supplier or to a designated collection point.

Waterproof Requirements

To effectively protect the device from water ingress, please ensure waterproof treatment is applied to all cables and interfaces. The following steps are for reference only. Actual construction should be flexibly adjusted according to the on-site environment.

Device failures caused by inadequate waterproofing measures are not covered under the warranty. Thank you for your understanding and cooperation.

1 Pre-processing

1. Before applying waterproofing, ensure all necessary cables are connected, and trim off the exposed copper wires from any unused cables.
2. Wrap the cables with insulation tape (purchased separately).

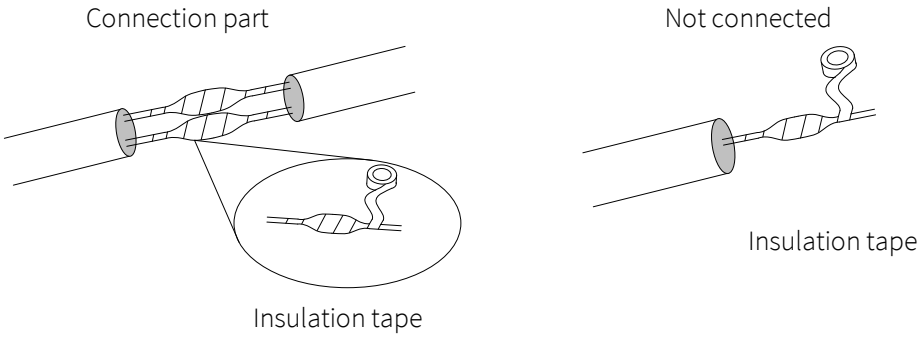

3. Use a DC plug to waterproof any unused DC interfaces. Ignore this step if the device does not have this interface.

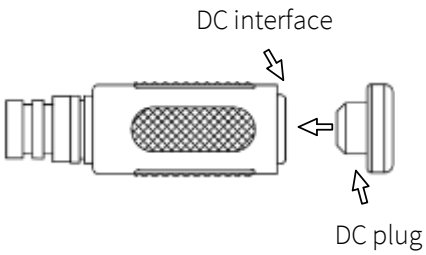

2 Waterproofing

1. Use the waterproof components included in the box to waterproof the network cable. Slide the waterproof components onto the cable in the order shown in the diagram.

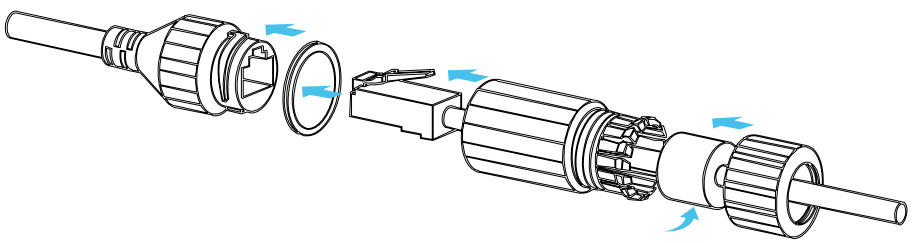

2. Use waterproof tape (purchased separately) to waterproof the cables and interfaces.
   (1) Fully stretch the waterproof tape towards both ends.
   (2) Wrap the stretched tape tightly around the cable connection part or cable ends. Make sure the tape is fully stretched during the process.
   (3) Tighten the tape at both ends to prevent water ingress.

Wrap the cables separately first.

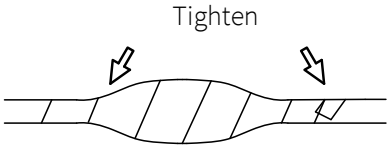

Wrap all cables together.

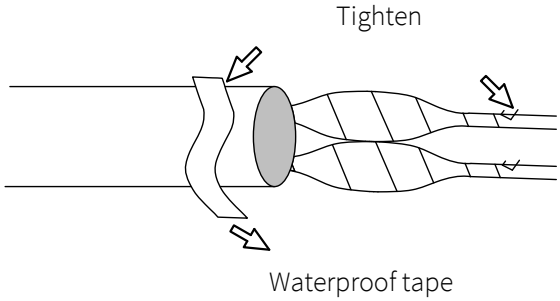

3. (Optional) Place the waterproofed cable into a waterproof junction box (purchased separately).

CAUTION!

- All cable connections must not be exposed and must not come into contact with liquid water.
- Opened devices must be restored and securely fastened.
- Place the power adapter inside the power distribution box.

1 Packing List

Contact your local dealer if the package is damaged or incomplete. The package contents may vary with device model.

No.	Name	Qty	Unit
1	Camera	1	PCS
2*	Waterproof components(1)	1	Set
3*	Screw components(2)	1	Set
4*	Mount accessories(3)	1	Set
5	Product documents	1	Set

Remarks:

* means optional and supplied with certain models only.

(1) Including one or more waterproof components such as tape and plug.

(2) Including one or more items from screws, hex key, etc.

(3) Including one or more items from drill template, bracket adapter, antistatic gloves, etc.

2 Safety Instructions

Installation and maintenance of the unit and its accessories must be carried out by qualified personnel with basic skills in safe operation. Before installation, be sure to carefully read and implement the safety instructions specified in this manual.

2.1 Installation

- When installing and using the device, it is important to avoid extreme cold or hot temperatures, high humidity, excessive dust, prolonged vibration, etc. Keep the device away from sources of heat such as heaters, fireplaces, bridge abutments, etc. Specific temperature and humidity requirements can be found in the latest product brochure.
- Do not install the device in areas close to switchgear closing zones, power grid transmission lines, main broadcasting tower antenna directions, railway overhead lines, radars, base station antennas, or other environments with strong electromagnetic interference (ignoring this may damage the product).
- Avoid using this product in environments with strong corrosive substances, strong acids, high salt-alkali content, such as offshore islands, offshore platforms, chemical industrial areas, coastal areas (within 5 kilometers), etc. If there are special installation requirements in challenging environments, ensure proper anti-corrosion treatment is carried out.
- During installation, handling, and transportation, take care to prevent friction, pressure, scratches, and window glass contamination. Please do not remove the transparent protective film on the window glass during the installation process. The film can be removed before starting the device.
- If the device is installed on a wall or ceiling, ensure that the wall or ceiling is sturdy enough to support the weight of the device.
- Do not overbend or drag cables during installation; otherwise, poor cable contact may cause malfunction.
- When connecting to an external interface, use an existing connection terminal, and ensure that the cable terminal (latch or clamp) is in good condition and properly fastened.
- When connecting to the alarm input interface, ensure that the high-level signal of the alarm input does not exceed 5V DC.
- Make sure the length of the power cable between the power adapter and the camera is not too long, otherwise the voltage of the camera is lowered, causing the camera to work abnormally. If it is required to lengthen the power cable, lengthen the cable between the power adapter and the mains.
- Protect the power cable from being stepped on or crushed, especially at the plug, power socket, and connection points leading from the device.
- Make sure that the power has been disconnected before you maintain or move the device.

2.2 Maintenance

- If there is dust on the window glass, remove the dust gently using an oil-free brush or a rubber dust blowing ball.
- If there is grease or a dust stain on the window glass, clean the glass surface gently from the center outward using anti-static gloves or oil-free cloth. If the grease or stain still remains, use anti-static gloves or oil-free cloth dipped with detergent and clean the glass surface gently from the center outward until it is clean.
- Do not use organic solvents (such as benzene and alcohol) to clean the window glass.

3 Product Appearance

The appearances may vary with model. The figures are for illustrative purpose only. The following takes a typical device as an example.

3.1 Appearance and Dimensions

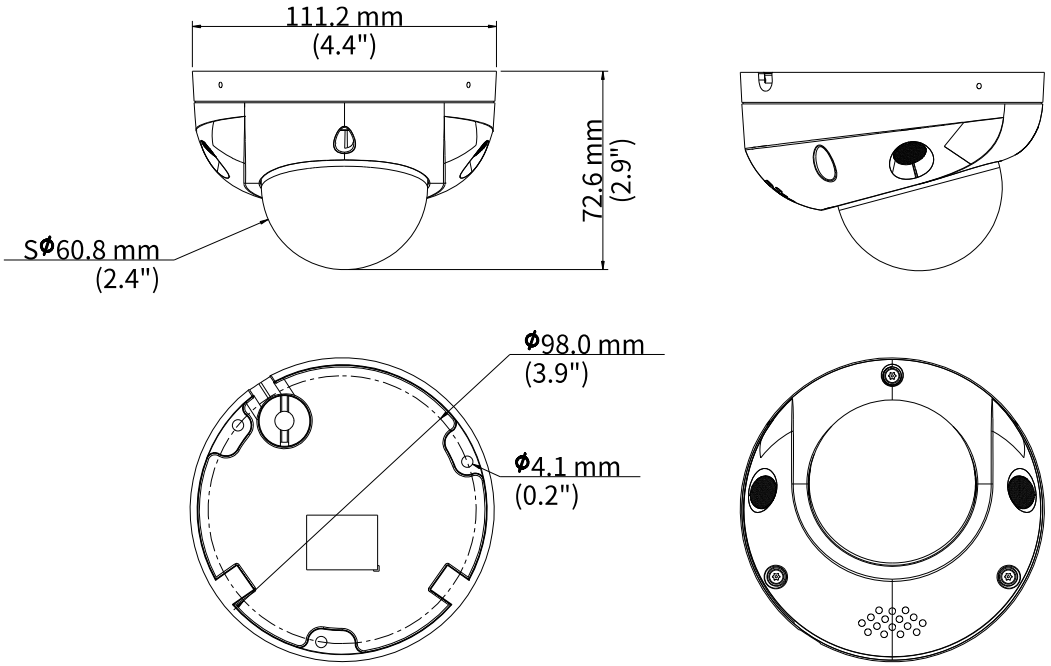

3.2 Tail Cables

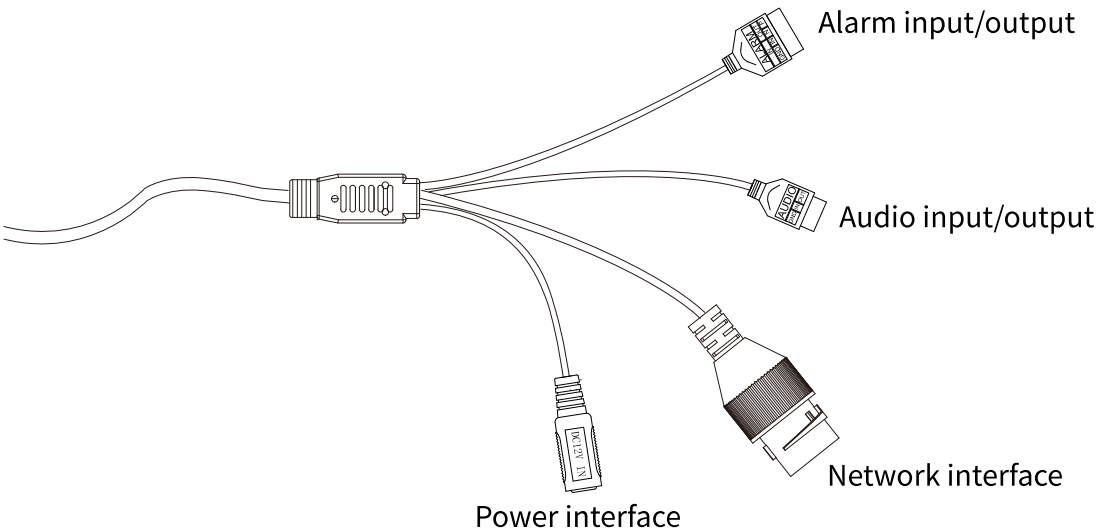

4 Device Installation

The installation method should be based on the actual product. The following takes a typical device as an example.

4.1 Check Before Installation

- Check package contents

Check against the packing list to ensure all components are complete.

- Check mounting surface

Verify that the mounting surface can support the camera's weight. Reinforce if necessary.

4.2 (Optional) Install a Micro SD Card

The figures below are for illustrative purpose only. The actual card slot position may vary.

1. Loosen the three captive screws and remove the dome cover.

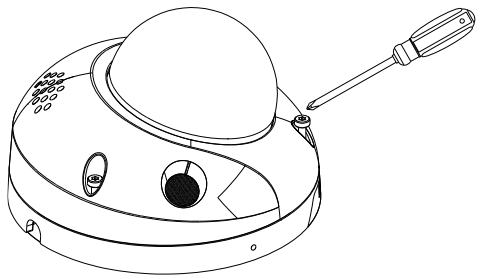

2. Install a Micro SD card to use the local storage function. For the recommended Micro SD card specifications, please consult your dealer.

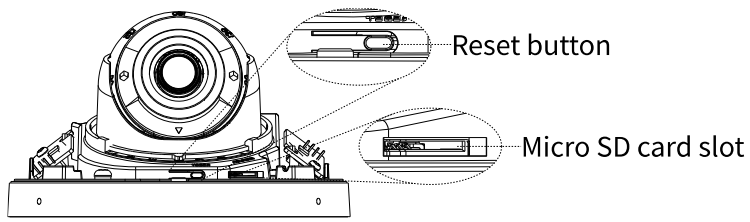

CAUTION!

Do not insert or remove the SD card with power connected; it may damage the SD card or affect the device operation.

NOTE!

To restore factory default settings, remove the card cover in the same way, then press and hold the reset button for more than 3 seconds. The factory default settings will be restored after the device restarts.

4.3 Mount Device

NOTE!

- Ensure that all the screws are securely fastened.
- Be sure to seal and waterproof the connection points between the device and the bracket, gaps on the wall surface, and cable holes on the ceiling.
- The junction box is not supplied with the product and is sold separately.

1. Position the drill template. Use a 6 mm or 6.5 mm diameter drill bit to drill three 30 mm-deep holes according to the three markings B on the template.

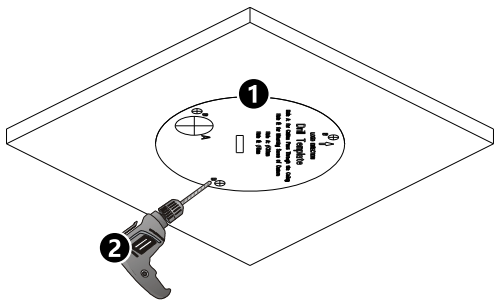

2. Knock the plastic expansion tubes into the holes and secure them. Lead the cables through the ceiling hole.

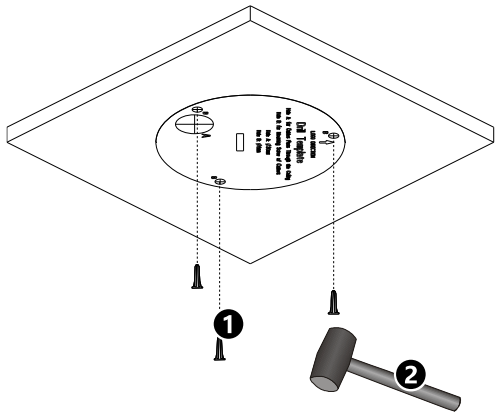

3. Fix the device to the ceiling with the supplied screws.

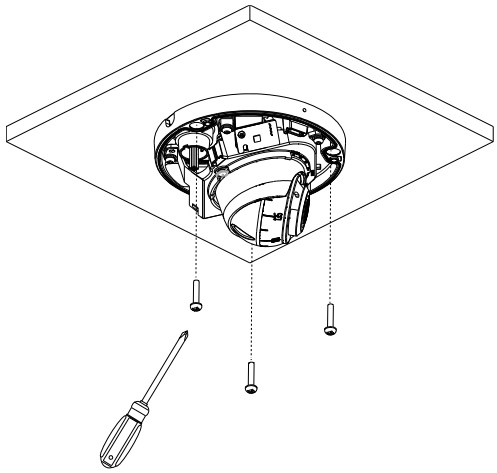

4. Loosen the dome fixing screw, adjust the direction horizontally by hand.

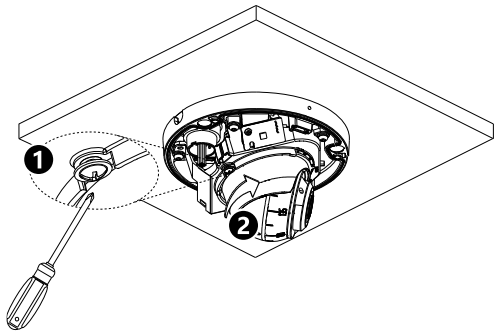

5. Insert the hex key into the adjustment hole beside the lens, then rotate the hex key to adjust the lens position.

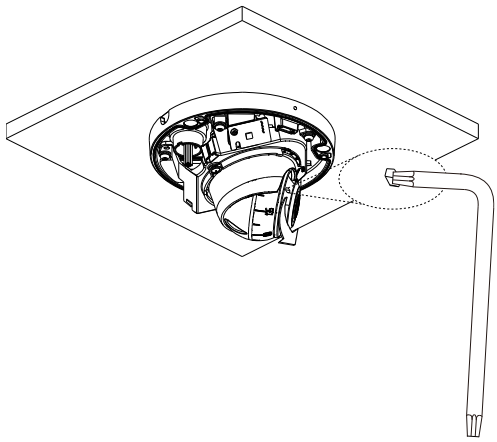

Note: There are adjustment holes on both sides of the lens. Use either one for adjustment.

6. Install the dome cover and fasten the captive screws.

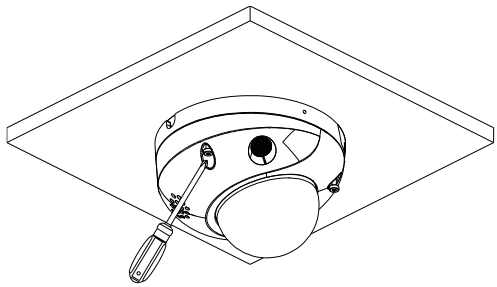

7. The above steps are for concealed cable installation. For surface-mount installation, it is recommended to use a junction box and lead the cables directly through the cable hole.

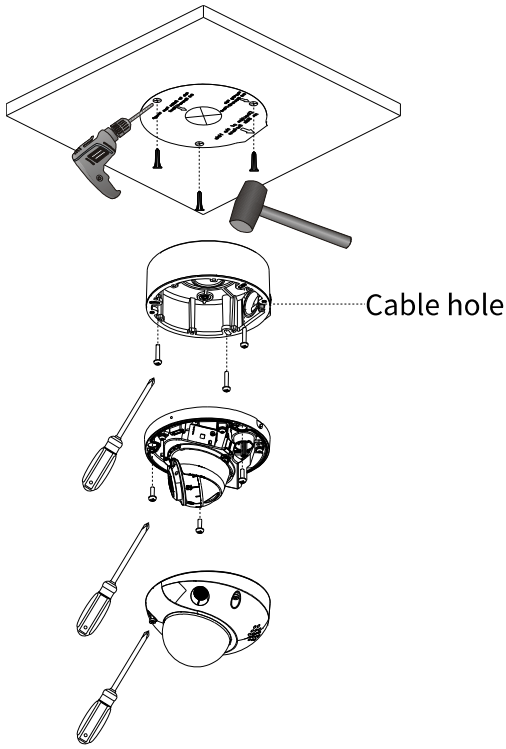

5 Startup

After completing the cable connection, connect the device to the mains power to start it up.

6 Web Login

Default IP address:

192.168.1.13

Default username/password:

admin / 123456

Note:

For security, please set a strong password of at least nine characters including uppercase and lowercase letters, digits, and special characters. You are strongly recommended to regularly change the device password and keep it secure to ensure that only authorized users can log in.