Thermal & Optical Bi-spectrum Network Bullet Camera

TIC2624S-F35-4F12AC-I3

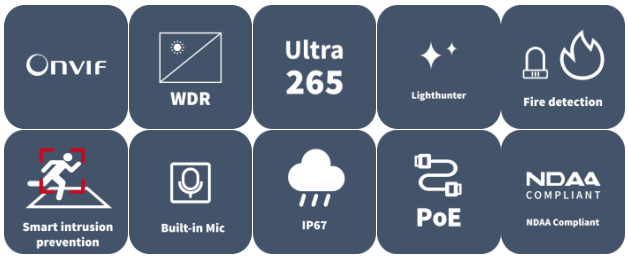

Features

- Thermal & Optical dual-spectrum image, dual video with single ip address, adaptable to more various scenes.
- The thermal imaging channel adopt instant image super-resolution.
- Original resolution is 400 × 300 .
- 1/2.7" CMOS, high sensitivity sensor, satisfy the need of starlight image.
- Thermal module support reliable fire detection, smoking detection and fire shield area .
- Thermal module supports temperature detection and cold&hot spot tracking,supports abnormal temperature alarm.
- Thermal & Optical dual-spectrum smart intrusion prevention: cross line, enter area, leave area, intrusion.
- Optical module supports smog recognition, which can help with fire alarm reconfirm.
- Support picture-in-picture mode, real-time contrast live, more convenient and clear .
- Support audio and light alarm, with red and blue warning lights built in.
- Ultra 265, H.265, H.264, MJPEG.
- Max 2688 × 1520@30fps in the optical module and max 1080P@30 fps in the thermal module.
- DC12 V±25% or PoE (IEEE802.3 at) power supply.
- Alarm 3 in and 2 out, audio 2 in and 1 out, micro sd, up to 512 GB.
- Anti-corrosion design for stable protection (NEMA 4X).

Specifications

Channel	Optical	Thermal
Camera		
Max Resolution	4 MP	1080P
Original Resolution	N/A	400 × 300
Sensor	1/2.7" CMOS	Vanadium oxide uncooled focal plane arrays
Min. Illumination	Colour: 0.005 lux (F1.6, AGC ON) B/W: 0.003 lux(F1.6,AGC ON) 0 lux with IR	N/A
Day/Night	IR-cut filter with auto switch (ICR)	N/A
Pixel Size	N/A	12 um
NETD	< 30 mk@F1.0@25 ℃	
Shutter	Auto/Manual, 1 to 1/100000 s	
WDR	120 dB	
S/N	>56 dB	
Case Type	Bullet	
Lens		
Focal Length	12mm	35mm
Iris	F1.6	F1.0
Field of View (H)	24.5°	7.7°
Field of View (V)	13.9°	5.8°
Field of View (D)	30.1°	9.1°
DORI		
DORI Distance (Detect)	270.0 m(885.8 ft)	N/A
DORI Distance (Observe)	108.0 m(354.4 ft)	N/A
DORI Distance (Recognize)	54.0 m(177.2 ft)	N/A
DORI Distance (Identify)	27 m(88.6 ft)	N/A
Illuminator		
Wavelength	750 nm	N/A
Illumination Distance (IR)	100m	N/A
Light On/Off Control	Auto/Manual	N/A
Video		
Frame Rate	4MP(2688*1520), Max 30fps	1080P(1920*1080), Max 30fps
Video Compression	Ultra 265, H.265, H.264, MJPEG	
Video Bit Rate	128 Kbps to 16 Mbps	
U-code	Support	
ROI	Support	
Video Stream	Five streams	
OSD	Up to 10 OSDs	
Privacy Mask	Up to 8 areas (8 blacks/ 8 mosaics)	N/A
Image		
White Balance	Auto, Outdoor, Fine tune, Sodium lamp,	N/A

	Locked, Auto2	
Digital Noise Reduction	2D/3D DNR	
Flip	Normal, Flip vertical, Flip horizontal, 180°	
HLC	Support	N/A
BLC	Support	N/A
Defog	Digital defog	N/A
Palette	N/A	lava, medical, fusion, arctic, mazarine, rain, puce, white hot, iron oxide red, hot iron, rainbow 1, rainbow 2, rainbow 3, depict hot, ice hot, black hot, red hot, green hot, color 1, color 2
Low Illumination Characteristics	LightHunter	
Intelligent		
Smart Intrusion Prevention	Cross line detection, intrusion detection, enter area detection, leave area detection (support false alarm filtering and the classification of human, non-motor vehicle and vehicle)	Cross line detection, intrusion detection, enter area detection, leave area detection (support false alarm filtering and the classification of human and vehicle)
Temperature Range		-20℃ ~150℃ (-4 ℉ to 302℉)
Detection distance for personnel (1.8 × 0.5 meters)	N/A	350m
Detection distance for vehicles (4 × 1.4 meters)	N/A	1050m
Events		
Fire Detection	N/A	Support
Basic Detection	Motion detection, Tampering alarm, Audio detection	N/A
General Function	Watermark, IP address filtering, Access policy, ARP protection, RTSP authentication, User authentication, HTTP authentication, Alarm input, Alarm output	
Detection distance for temperature (0.1 × 0.1 meters)	N/A	30m
Detection distance for fire (0.1 × 0.1 meters)	N/A	220m
Audio		
Audio Compression	G.711U, G.711A	
Audio Bitrate	128 Kbps	
Two-way Audio	Support	
Suppression	Support	
Sampling Rate	16KHZ	
Storage		
Edge Storage	MicroSD, up to 512 GB	
Network Storage	ANR	
Network		

Protocols	IGMP, RTP, SMTP, IPv4, IPv6, ICMP, ARP, TCP, UDP, DHCP, PPPoE, RTSP, RTCP, RTMP, DNS, DDNS, NTP, FTP, UPnP, HTTP, HTTPS, 802.1x, SNMP, QoS, SSL/TLS, SSH	
Compatible Integration	ONVIF (Profile S, Profile G, Profile M),SDK, API	
User/Host	Up to 32 users. 3 user levels: administrator, common user and operator	
Client	EZStation, UNV-Link, UNV-Link Pro	
Web Browser	Plug-in required live view: IE 10+, Chrome 45+, Firefox 52+, Edge 79+	
Interface		
Built-in Mic	Support	
Built-in Speaker	Support	
Audio I/O	2 Input: impedance 1 kΩ, amplitude 2.5 V [p-p], 1 Output: impedance 600 Ω, amplitude 2 V [p-p]	
Alarm I/O	3/2	
Serial Port	1 × RS485	
Network	1 × RJ45 10 M/100 M Base-TX Ethernet	
Video Output	N/A	1 BNC (for debugging)
Certification		
EMC	CE-EMC (EN 55032,EN 61000-3-3,EN IEC 61000-3-2,EN 50130-4) FCC (FCC CFR 47 part15 B, ANSI C63.4-2014)	
Safety	CE LVD (EN IEC 62368-1) UL (UL 62368-1)	
Environment	CE-RoHS (2011/65/EU;(EU)2015/863); WEEE (2012/19/EU); Reach (Regulation (EC) No 1907/2006)	
Protection	IP67 (IEC 60529:1989+AMD1:1999+AMD2:2013)	
General		
Power	DC12V (± 25%), PoE (IEEE802.3 at)	
Power Consumption	22.4W	
Power Interface	Ø5.5 mm coaxial power plug	
Dimensions	406.0 x 130.0 x 130.0 mm (16.0" x 5.1" x 5.1")(L x W x H)	
Weight	2.23kg	2.23 kg
Working Environment	-40 ℃ to 70 ℃ (-40 ℉ to 158 ℉), Humidity: ≤ 95% RH (non-condensing)	
Storage Environment	-40 ℃ to 70 ℃ (-40 ℉ to 158 ℉), Humidity: ≤ 95% RH (non-condensing)	
Surge Protection	6 KV	
Reset Button	Support	
RTC	Support	
Web Client Language	22 Languages: Traditional Chinese, English, Simplified Chinese, Polish, German, Russian, French, Korean, Dutch, Czech, Portuguese (Europe), Portuguese (Brazil), Japanese, Thai, Turkish, Spanish (Latin America), Spanish (Europe), Hungarian, Italian, Vietnamese, Arabic, Slovak	
Live View		
Maximum Bitstream	35	
Maximum Bandwidth	50 Mbps	
Plugin Free	Support	
OSD Font	Vector	
OSD Color	Support	
OSD Character Number	40	

Other	
Corridor Mode	Support

DRI Description

The optimal detection, recognition, and identification distances are calculated according to Johnson's Criteria.

Detection Range: In order to distinguish an object from the background, the object must be covered by 1.5 or more pixels.

Recognition Range: In order to classify the object (animal, human, vehicle, etc), the object must be covered by 6 or more pixels.

Identification Range: In order to identify the object and describe it in details, the object must be covered by 12 or more pixels.

Lens	Detection Range (Vehicles:4.0 × 1.4 m)	Detection Range (Humans:1.8 × 0.5 m)	Recognition Range (Vehicles : 4.0 × 1.4 m)	Recognition Range (Humans : 1.8 × 0.5 m)	Identification Range (Vehicles : 1.4 × 4.0 m)	Identification Range (Humans: 1.8 × 0.5 m)
10mm	986m	395m	329m	132m	164m	66m
25mm	1900m	950m	490m	240m	330m	160m
35mm	2500m	1250m	690m	340m	460m	230m

Dimensions

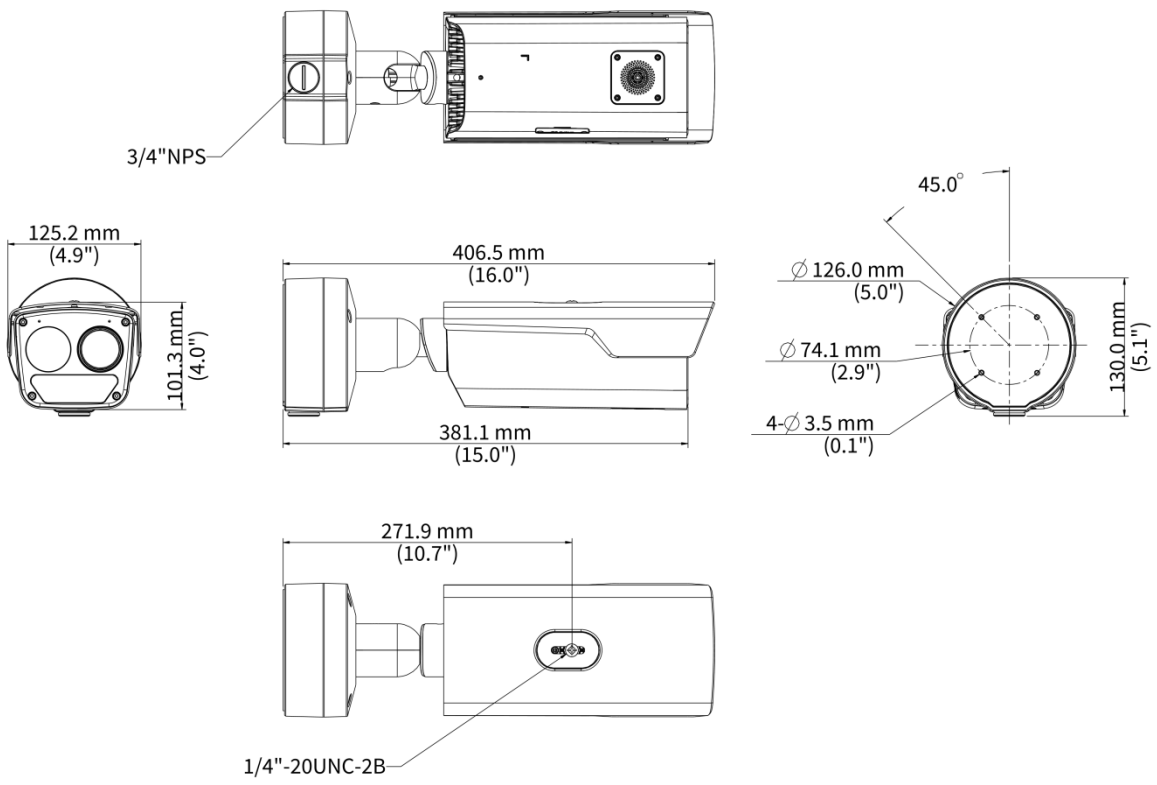

Accessories

TR-UP06-C-IN-V2 Pole Mounting Bracket For Bullet Junction Box Only	TR-UC08-C-V2 Bullet&Dome Corner Mounting Bracket	

Unlimited New View

Zhejiang Uniview Technologies Co., Ltd.

http://www.uniview.com

overseasbusiness@uniview.com; globalsupport@uniview.com

No. 369, Xietong Road, Xixing Sub-district, Binjiang District, Hangzhou City, 310051, Zhejiang Province, China

©2025-2026 Zhejiang Uniview Technologies Co., Ltd. All rights reserved.

*Product specifications and availability are subject to change without notice.

Despite our best efforts, technical or typographical errors may exist in this document. Uniview cannot be held responsible for any such errors and reserves the right to change the contents of this document without prior notice.