2MP Intelligent Fixed IR Bullet Network Camera

IPC2122SB-ADF28(40)KM-I1

Features

- High quality image with 2 MP, 1/2.8" CMOS sensor
- 1080P (1920 × 1080)@30/25 fps; 720P (1280 × 720)@30/25 fps
- Ultra 265, H.265, H.264, MJPEG
- Supports Wise-ISP technology, deeply optimizing color, detail, and smear effects in extremely low-light scenes
- Smart intrusion prevention, including cross line, intrusion, enter area, leave area detection
- Intelligent intrusion prevention system based on target classification significantly reduces false alarms caused by leaves, birds, and lights, accurately focusing on humans, vehicles, and non-motor vehicles
- Support ultra motion detection
- Intelligent people flow counting and crowd density monitoring
- 120 dB true WDR technology enables clear image in strong light scene
- Supports 9:16 corridor mode
- Built-in mic
- Smart IR, up to 40 m (131.2 ft) IR distance
- MicroSD, up to 1 TB
- IP67 protection

Specifications

Model	IPC2122SB-ADF28KM-I1	IPC2122SB-ADF40KM-I1
Camera		
Max Resolution	2 MP	
Sensor	1/2.8" CMOS	
Min. Illumination	Color: 0.001 Lux (F1.6, AGC ON), 0 Lux with IR	
Day/Night	IR-cut filter with auto switch (ICR)	
Shutter	Auto/Manual, 1 to 1/100000 s	
Adjustment Angle	Pan: 0° to 360°, Tilt: 0° to 90°, Rotate: 0° to 360°	
S/N	> 52 dB	
WDR	120 dB	
Lens		
Focal Length	2.8 mm	4.0 mm
Iris	F1.6	
Field of View (H)	108.6 °	86.5 °
Field of View (V)	59.4 °	46.6 °
Field of View (D)	123.5 °	102.5 °
Lens Type	Fixed	
Iris Type	Fixed	
DORI		
DORI Distance (Lens)	2.8 mm	4.0 mm
DORI Distance (Detect)	43.4 m (142.5 ft.)	62.1 m (203.6 ft.)
DORI Distance (Observe)	17.4 m (57.0 ft.)	24.8 m (80.4 ft.)
DORI Distance (Recognize)	8.7 m (28.5 ft.)	12.4 m (40.7 ft.)
DORI Distance (Identify)	4.3 m (14.3 ft.)	6.2 m (20.4 ft.)
Illuminator		
Illumination Distance (IR)	40 m (131.2 ft.)	
Wavelength	850 nm	
Supplemental Light	IR	
Video		
Video Compression	Ultra 265, H.265, H.264, MJPEG	
H.264 Code Profile	Baseline profile, Main profile, High profile	
Frame Rate	Main Stream: 1080P (1920 × 1080), max. 30 fps; 720P (1280 × 720), max. 30 fps; Sub Stream: 720P (1280 × 720), max. 30 fps; D1 (720 × 576), max. 30 fps; 640 × 360, max. 30 fps; 2CIF (704 × 288), max. 30 fps; CIF (352 × 288), max. 30 fps; Third Stream: D1 (720 × 576), max. 30 fps; 640 × 360, max. 30 fps; 2CIF (704 × 288), max. 30 fps; CIF (352 × 288), max. 30 fps;	
Video Bit Rate	128 Kbps to 16 Mbps	
U-code	Support	
OSD	Up to 8 OSDs	
Privacy Mask	Up to 4 areas	
ROI	Up to 8 areas	

Snapshot	Support
Video Stream	Triple streams
Image	
Smart IR	Support
White Balance	Auto, Outdoor, Fine tune, Sodium lamp, Locked, Auto2, Area white balance
Digital Noise Reduction	2D/3D DNR
Flip	Normal, Flip vertical, Flip horizontal, 180°, 90° Clockwise, 90° Anti-clockwise
Dewarping	Support
HLC	Support
BLC	Support
Defog	Digital defog
Intelligent	
Smart Intrusion Prevention	Cross line detection, intrusion detection, enter area detection, leave area detection (support false alarm filtering and the classification of human, non-motor vehicle and vehicle)
People Counting	Support people flow counting and crowd density detection
Statistical Analysis	N/A
Events	
Basic Detection	Motion detection, Ultra motion detection, Tampering alarm, Audio detection
General Function	Watermark, IP address filtering, Access policy, ARP protection, RTSP authentication, User authentication, HTTP authentication
Audio	
Audio Compression	G.711U, G.711A, AAC-LC
Audio Bitrate	G.711U/G.711A: 64 kbps, AAC-LC: 128 kbps
Two-way Audio	N/A
Suppression	Support
Sampling Rate	G.711U/G.711A: 8 kHz, AAC-LC: 8 kHz, 16 kHz, 48 kHz
Storage	
Edge Storage	MicroSD, up to 1 TB
Network Storage	ANR, NAS (NFS)
Network	
Protocols	IGMP, SMTP, IPv6, ICMP, ARP, TCP, UDP, DHCP, PPPoE, RTSP, DNS, DDNS, NTP, UPnP, HTTP, 802.1x, SNMP, SSL/TLS, IPv4, RTP, RTCP, RTMP, HTTPS, FTP, QoS
Compatible Integration	ONVIF (Profile S, Profile G, Profile T, Profile M), API, SDK
Client	EZStation, APP
Web Browser	Plug-in required live view: IE 10+, Chrome 45+, Firefox 52+, Edge 79+, Plug-in free live view: Chrome 57+, Firefox 58+, Edge 16+
Security	Password protection, Strong Password, HTTPS encryption, Export operation logs, Basic and Digest Authentication for RTSP, Digest Authentication for HTTP, TLS 1.2, WSSE and Digest Authentication for ONVIF, DTLS 1.2
User/Host	Up to 32 users. 3 user levels: administrator, common user and operator
Interface	
Audio I/O	N/A
Alarm I/O	N/A

Serial Port	N/A
Built-in Mic	Support
Built-in Speaker	N/A
WIFI	N/A
Network	1 × RJ45 10 M/100 M Base-TX Ethernet
Video Output	N/A
Certification	
EMC	CE-EMC (EN 55032, EN 61000-3-3, EN IEC 61000-3-2, EN 50130-4) FCC (FCC 47 CFR part15 B)
Safety	CE-LVD (EN 62368-1) UL/CUL (UL 62368-1, CAN/CSA C22.2 No. 62368-1)
Environment	CE-RoHS (2011/65/EU ; (EU) 2015/863) ; WEEE (2012/19/EU)
Protection	IP67 (IEC 60529)
General	
Power	DC 12 V±25%, PoE (IEEE 802.3af)
Power Consumption	Max. 2.5 W
Power Interface	Ø5.5 mm coaxial power plug
Dimensions	156.0 mm × 63.0 mm × 63.0 mm (6.1" × 2.5" × 2.5") (L × W × H)
Weight	0.41 kg (0.90 lb)
Working Environment	-30 ℃ to 60 ℃ (-22 ℉ to 140 ℉), Humidity: ≤ 95% RH (non-condensing)
Storage Environment	-30 ℃ to 60 ℃ (-22 ℉ to 140 ℉), Humidity: ≤ 95% RH (non-condensing)
Surge Protection	4 KV
Reset Button	Support
Material	Graphene + Metal
Web Client Language	20 Languages: Traditional Chinese, English, Simplified Chinese, Polish, German, Russian, French, Korean, Dutch, Czech, Portuguese (Europe), Portuguese (Brazil), Japanese, Thai, Turkish, Spanish (Latin America), Spanish (Europe), Hungarian, Italian, Vietnamese

Dimensions

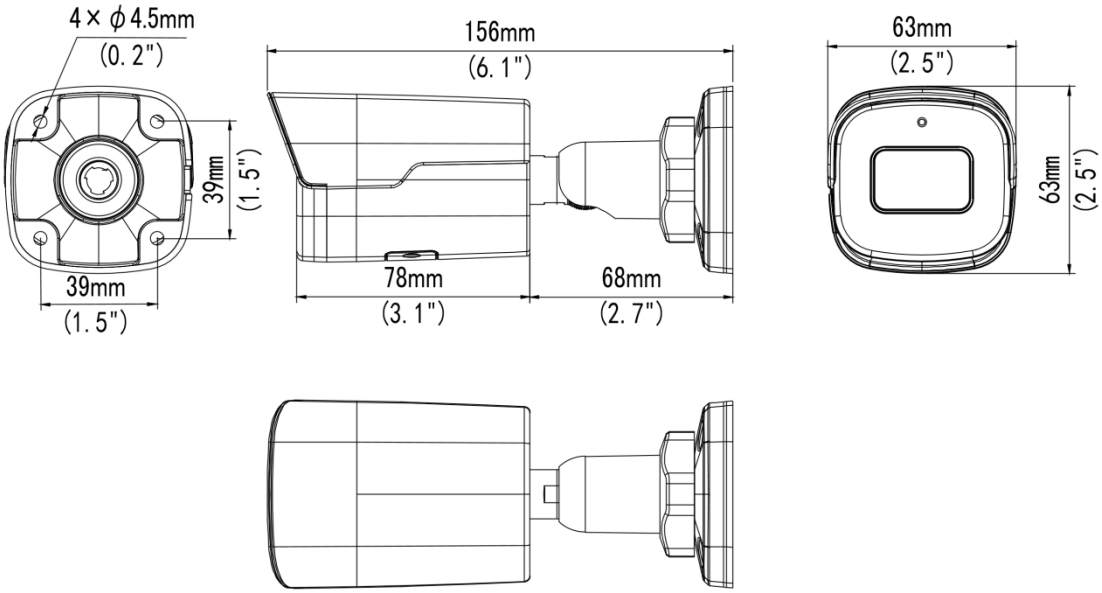

Accessories

TR-JB05-A-IN Bullet Junction Box(Support Wiring From Behind,Square)	TR-A01-IN NPT 3/4'' Waterproof Cable Gland	TR-UP06-B-IN Bullet Pole Mounting Bracket
TR-UP06-C-IN-V2 Pole Mounting Bracket For Bullet Junction Box Only	**TR-UC08-C-V2** Bullet&Dome Corner Mounting Bracket	
	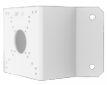	

Unlimited New View

Zhejiang Uniview Technologies Co., Ltd.

http://www.uniview.com

overseasbusiness@uniview.com; globalsupport@uniview.com

No. 369, Xietong Road, Xixing Sub-district, Binjiang District, Hangzhou City, 310051, Zhejiang Province, China

©2026 Zhejiang Uniview Technologies Co., Ltd. All rights reserved.

*Product specifications and availability are subject to change without notice.

Despite our best efforts, technical or typographical errors may exist in this document. Uniview cannot be held responsible for any such errors and reserves the right to change the contents of this document without prior notice.