5MP HD Intelligent Light and Audible Warning Fixed Bullet Network Camera

IPC2B15SS-ADF28(40)KMC-I1

Features

- High quality image with 5 MP, 1/2.7" CMOS sensor
- 5 MP (2880 × 1620)@30/25 (default) fps; 4 MP (2560 × 1440)@30/25 fps; 3 MP (2304 × 1296)@30/25 fps; 1080P (1920 × 1080)@30/25 fps
- Ultra 265, H.265, H.264, MJPEG
- Intelligent perimeter protection, including cross line, intrusion, enter area, leave area detection
- Intelligent intrusion prevention system based on target classification significantly reduces false alarms caused by leaves, birds, and lights, accurately focusing on humans, vehicles, and non-motor vehicles
- Intelligent people flow counting and crowd density monitoring
- Smart intrusion prevention with color retrieval
- ASM (auto scene match)
- 130 dB true WDR technology enables clear image in strong light scene
- Supports red and blue warning light
- Supports 9:16 corridor mode
- Alarm I/O: 1/1, audio I/O: 1/1, built-in mic and speaker
- Smart IR, up to 40 m (131.2 ft) IR distance
- MicroSD, up to 1 TB
- IP67 protection and IK10 vandal resistant

Specifications

Model	IPC2B15SS-ADF28KMC-I1	IPC2B15SS-ADF40KMC-I1
Camera		
Max Resolution	5 MP	
Sensor	1/2.7" CMOS	
Min. Illumination	Color: 0.001 Lux (F1.0, AGC ON), 0 Lux with light	
Day/Night	IR-cut filter with auto switch (ICR)	
Shutter	Auto/Manual, 1 ~ 1/100000s	
Adjustment Angle	Pan: 0° to 360°, Tilt: 0° to 90°, Rotate: 0° to 360°	
S/N	>56 dB	
WDR	130 dB	
Lens		
Focal Length	2.8 mm	4.0 mm
Iris Type	Fixed	
Iris	F1.0	
Field of View (H)	112.8°	91.2°
Field of View (V)	59.4°	51.0°
Field of View (D)	116.3°	96.9°
DORI		
DORI Distance (Lens)	2.8 mm	4 mm
DORI Distance (Detect)	63.0 m (206.7 ft.)	90.0 m (295.3 ft.)
DORI Distance (Observe)	25.2 m (82.7 ft.)	36.0 m (118.1 ft.)
DORI Distance (Recognize)	12.6 m (41.3 ft.)	18.0 m (59.1 ft.)
DORI Distance (Identify)	6.3 m (20.7 ft.)	9.0 m (29.5 ft.)
Illuminator		
Supplemental Light	Dual light	
Illumination Distance (IR)	IR 40 m (131.2 ft.), warm light 40 m (131.2 ft.)	
Illumination Distance (Warm Light)	IR 40 m (131.2 ft.), warm light 40 m (131.2 ft.)	
IR On/Off Control	Auto/Manual	
Wavelength	850 nm	
Light On/Off Control	Auto/Manual	
Video		
Video Compression	Ultra 265, H.265, H.264, MJPEG	
H.264 Code Profile	Baseline profile, Main profile, High profile	
Frame Rate	Main Stream: 5 MP (2880 × 1620), max. 30 fps; 4 MP (2560 × 1440), max. 30 fps; 3 MP (2304 × 1296), max. 30 fps; 1080P (1920 × 1080), max. 30 fps; 720P (1280 × 720), max. 30 fps; Sub Stream: 1080P (1920 × 1080), max. 30 fps; 720P (1280 × 720), max. 30 fps; D1 (720 × 576), max. 30 fps; 640 × 360, max. 30 fps; 2CIF (704 × 288), max. 30 fps; CIF (352 × 288), max. 30 fps; Third Stream: D1 (720 × 576), max. 30 fps; 640 × 360, max. 30 fps; 2CIF (704 × 288), max. 30 fps; CIF (352 × 288), max. 30 fps;	
Video Bit Rate	128 Kbps to 16 Mbps	

U-code	Support
OSD	Up to 8 OSDs
Privacy Mask	Up to 4 areas
ROI	Support
Video Stream	Triple streams
Image	
White Balance	Auto, Outdoor, Fine tune, Sodium lamp, Locked, Auto2
Smart IR	Support
Digital Noise Reduction	2D/3D DNR
Auto Scene Match (ASM)	Support (only WDR)
Flip	Normal, Vertical, Horizontal, 180°, 90° Clockwise, 90° Anti-clockwise
Dewarping	N/A
HLC	Support
BLC	Support
Defog	Digital defog
Intelligent	
Smart Intrusion Prevention	Cross line detection, intrusion detection, enter area detection, leave area detection (support false alarm filtering and the classification of human, non-motor vehicle and vehicle)
Statistical Analysis	N/A
People Counting	Support people flow counting and crowd density detection
Attribute Collection	SIP with color retrieval
Events	
Basic Detection	Motion detection, Ultra motion detection, Tampering alarm, Audio detection, Object removed, Object Left Behind
General Function	Watermark, IP address filtering, Access policy, ARP protection, RTSP authentication, User authentication, HTTP authentication, Alarm input, Alarm output
Audio	
Audio Compression	G.711U, G.711A, AAC-LC
Audio Bitrate	G.711U/G.711A: 64 kbps, AAC-LC: 128 kbps
Two-way Audio	Support
Suppression	Support
Sampling Rate	G.711U/G.711A: 8 kHz, AAC-LC: 8 kHz, 16 kHz, 48 kHz
Storage	
Edge Storage	MicroSD, up to 1 TB
Network Storage	ANR, NAS (NFS)
Network	
Protocols	IPv4, IPv6, IGMP, ICMP, ARP, TCP, UDP, DHCP, PPPoE, RTP, RTSP, RTCP, RTMP, DNS, DDNS, NTP, FTP, UPnP, HTTP, HTTPS, SMTP, 802.1x, SNMP, QoS, SSL/TLS, SSH
Compatible Integration	API, SDK, ONVIF (Profile S, Profile G, Profile T, Profile M)
User/Host	Up to 32 users. 3 user levels: administrator, common user and operator
Security	Password Protection, Strong Password, HTTPS Encryption, Export Operation Logs, Basic and Digest Authentication for RTSP, Digest Authentication for HTTP, TLS 1.2, WSSE and Digest Authentication for ONVIF

Client	EZStation, APP
Web Browser	Plug-in required live view: IE 10+, Chrome 45+, Firefox 52+, Edge 79+, Plug-in free live view: Chrome 57+, Firefox 58+, Edge 16+
Interface	
Audio I/O	1 Input: impedance 35 kΩ, amplitude 2 V [p-p], 1 Output: impedance 600 Ω, amplitude 2 V [p-p]
Alarm I/O	1/1
Serial Port	N/A
Built-in Mic	Support
Built-in Speaker	Support
WIFI	N/A
Network	1 × RJ45 10 M/100 M Base-TX Ethernet
Video Output	N/A
Certification	
EMC	CE-EMC (EN 55032, EN 61000-3-3, EN IEC 61000-3-2, EN 50130) FCC (FCC 47 CFR part15 B)
Safety	CE-LVD (EN 62368-1) CB (IEC 62368-1) UL/CUL (UL 62368-1, CAN/CSA C22.2 No. 62368-1)
Environment	CE-RoHS (2011/65/EU;(EU)2015/863); WEEE (2012/19/EU)
Protection	IP67 (IEC 60529)
General	
Power	DC 12 V±25%, PoE (IEEE 802.3af)
Power Consumption	Max. 10.0 W
Power Interface	Ø5.5 mm coaxial power plug
Dimensions	265.2 mm × 95.2 mm × 85.1 mm (10.4" × 3.7" × 3.4") (L × W × H)
Weight	0.97 kg (2.14 lb.)
Material	Metal + Plastic
Working Environment	-30 ℃ to 60 ℃ (-22 ℉ to 140 ℉), Humidity: ≤ 95% RH (non-condensing)
Storage Environment	-30 ℃ to 60 ℃ (-22 ℉ to 140 ℉), Humidity: ≤ 95% RH (non-condensing)
Surge Protection	4 KV
Reset Button	Support
Web Client Language	20 Languages: Traditional Chinese, English, Simplified Chinese, Polish, German, Russian, French, Korean, Dutch, Czech, Portuguese (Europe), Portuguese (Brazil), Japanese, Thai, Turkish, Spanish (Latin America), Spanish (Europe), Hungarian, Italian, Vietnamese

Dimensions

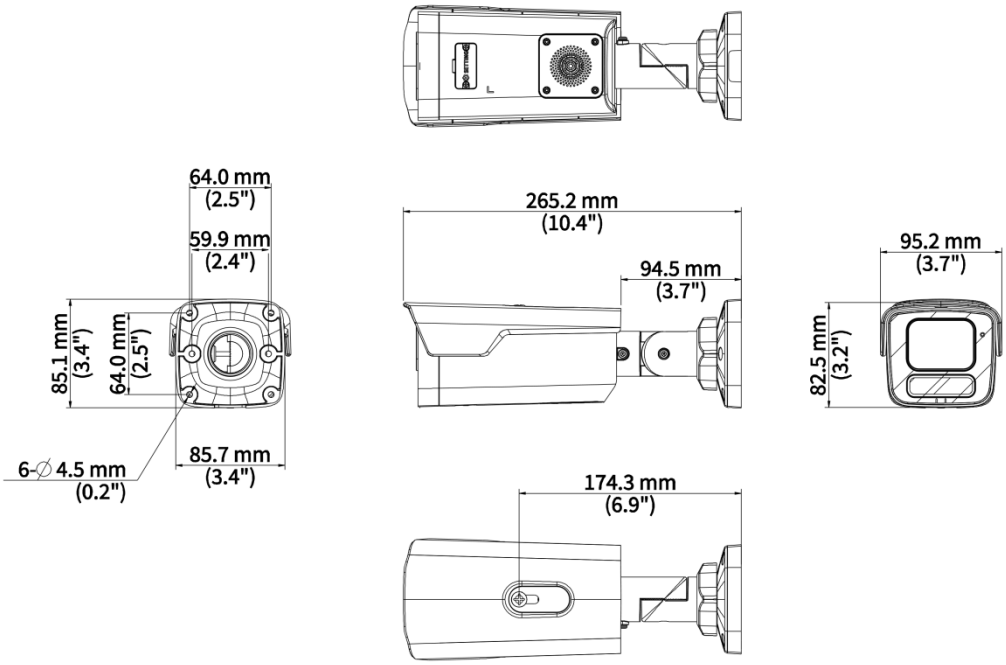

Accessories

TR-JB07-D-IN-V2 Bullet Junction Box(Support Wiring From Behind)	TR-JB06-A-IN Middle Bullet Junction Box(Elegant White)	TR-UP06-B-IN Bullet Pole Mounting Bracket
TR-A01-IN NPT 3/4'' Waterproof Cable Gland	**TR-UP06-C-IN-V2** Pole Mounting Bracket For Bullet Junction Box Only	**TR-UC08-C-V2** Bullet&Dome Corner Mounting Bracket

Unlimited New View

Zhejiang Uniview Technologies Co., Ltd.

http://www.uniview.com

overseasbusiness@uniview.com; globalsupport@uniview.com

No. 369, Xietong Road, Xixing Sub-district, Binjiang District, Hangzhou City, 310051, Zhejiang Province, China

©2023-2026 Zhejiang Uniview Technologies Co., Ltd. All rights reserved.

*Product specifications and availability are subject to change without notice.

Despite our best efforts, technical or typographical errors may exist in this document. Uniview cannot be held responsible for any such errors and reserves the right to change the contents of this document without prior notice.