Outdoor Dome Network Cameras

Quick Guide

V2.04

Preface

The content of this section is designed to ensure that users use the product correctly to prevent dangers or property loss caused by improper operation. Before using this product, be sure to read this manual carefully. Please keep this manual properly for future reference.

About This Manual

- We recommend that you use this manual under the guidance of a professional.
- This manual is designed for use with multiple product models, and it is not possible to list the appearance and functions of each product individually. Please refer to the actual product for use.
- This manual is intended for multiple software versions, and the illustrations and descriptions in this manual may be different from the actual GUI and functions of the software.
- Despite our best efforts, technical or typographical errors may exist in this manual. Uniview cannot be held responsible for any such errors and reserves the right to change the manual without prior notice.
- Users are fully responsible for the damages and losses that arise due to improper operation.
- Uniview reserves the right to change any information in this manual without any prior notice or indication. Due to such reasons as product version upgrade or regulatory requirement of relevant regions, this manual will be periodically updated.
- This manual will be updated in real time according to the laws and regulations of the relevant regions. For specific details, please refer to the product's paper copy, QR code, or official website. In case of any discrepancy between the paper copy and the electronic version, the electronic version shall prevail.

About This Product

If the product you have chosen is a video product, please strictly adhere to the applicable laws and regulations. You can visit our official website to inquire about the relevant content.

Instructions for Use

- This document serves as a guide for use only. All statements, information, and suggestions contained in this document do not constitute any express or implied warranty.
- We assume no responsibility for any special, incidental, consequential, or indirect damages resulting from the use of this manual or the use of our products, including but not limited to losses due to loss of business profits, data or document loss, and product malfunction or information leakage caused by cyber-attack, hacker attack, and virus infections.
- Due to uncertain factors such as the physical environment, there may be discrepancies between the actual values of some data and the reference values provided in the manual. In case of any questions or disputes, the company's final interpretation shall prevail.

Formatting Conventions

The UI formatting conventions used in this document are as follows:

Format	Meaning
Bold	Bold means UI elements (button names, menu names, window names, etc.), e.g., Click **Save**.
>	Indicate a sequence of actions, e.g., click Device Management > Add Device, which means first click Device Management, and then click Add Device.

Symbol Conventions

This document uses various distinctive symbols to highlight areas that require special attention during the operation process. The meanings of these symbols are as follows:

Symbol	Meaning
	NOTE: Provides tips and additional information related to the operation and use of the product.
	CAUTION: Alerts to matters that requires attention during operation, as improper handling may lead to product damage, data loss, or functional abnormalities.
	WARNING: The annotations following this symbol demand extra attention, as improper handling could potentially cause personal injury.

Legal Statement

Copyright Statement

©2025-2026 Zhejiang Uniview Technologies Co., Ltd. All rights reserved.
All parts of this document, including but not limited to text, images, and graphics, are copyrighted and belong to Zhejiang Uniview Technologies Co., Ltd (hereinafter referred to as “Uniview” "we" “us”). Without our written permission, no organization or individual may excerpt, copy, translate, modify, or disseminate any part or all of the content of this manual in any form.
The products described in this manual may contain software copyrighted by us and any potential licensors. Without the permission of the relevant rights holders, no one may copy, distribute, modify, excerpt, decompile, disassemble, decrypt, reverse engineer, rent, transfer, sublicense, or engage in any other actions that infringe upon the software copyright in any form.

Trademark Acknowledgements

unv uniarch are trademarks or registered trademarks of Uniview.

HEVC Advance™

All other trademarks, products, services and companies in this manual or the product described in this manual are the property of their respective owners.

Export Compliance Statement

Uniview complies with applicable export control laws and regulations worldwide, including that of the People's Republic of China and the United States, and abides by relevant regulations relating to the export, re-export and transfer of hardware, software and technology. Regarding the product described in this manual, Uniview asks you to fully understand and strictly abide by the applicable export laws and regulations worldwide.

EU Authorised Representative

UNV Technology EUROPE B.V. Treubstraa 1, 2288 EG, Rijswijk, Netherlands.
If you have any feedback, please contact us at service@uniview.com.

Disclaimer of Liability

- We assume no responsibility and offer no compensation for any special, incidental, consequential, or indirect damages resulting from the use of this manual or our products, including but not limited to losses related to lost business profits, data, or document loss.
- The product described in this manual is provided on an "as is" basis. Unless required by applicable law, this manual is only for informational purpose, and all statements, information, and recommendations in this manual are presented without warranty of any kind, expressed or implied,

including, but not limited to, merchantability, satisfaction with quality, fitness for a particular purpose, and noninfringement.

- Users must assume total responsibility and all risks for connecting the product to the Internet, including, but not limited to, network attack, hacking, and virus. Uniview strongly recommends that users take all necessary measures to enhance the protection of network, device, data and personal information. Uniview disclaims any liability related thereto but will readily provide necessary security related support.
- To the extent not prohibited by applicable law, in no event will Uniview and its employees, licensors, subsidiary, affiliates be liable for results arising out of using or inability to use the product or service, including, not limited to, loss of profits and any other commercial damages or losses, loss of data, procurement of substitute goods or services; property damage, personal injury, business interruption, loss of business information, or any special, direct, indirect, incidental, consequential, pecuniary, coverage, exemplary, subsidiary losses, however caused and on any theory of liability, whether in contract, strict liability or tort (including negligence or otherwise) in any way out of the use of the product, even if Uniview has been advised of the possibility of such damages (other than as may be required by applicable law in cases involving personal injury, incidental or subsidiary damage).
- To the extent allowed by applicable law, in no event shall Uniview's total liability to you for all damages for the product described in this manual (other than as may be required by applicable law in cases involving personal injury) exceed the amount of money that you have paid for the product.
- When using this product, please strictly adhere to the applicable laws and regulations to avoid infringing upon the rights of third parties, including but not limited to intellectual property rights, data rights, or other privacy rights. You must also not use this product for the purposes of developing or facilitating the use of weapons of mass destruction, biological or chemical weapons, nuclear weapons, or for any other purposes that violate international norms and regulations.

Privacy Protection Reminder

Uniview complies with appropriate privacy protection laws and is committed to protecting user privacy. You may want to read our full privacy policy at our website and get to know the ways we process your personal information. Please be aware, using the product described in this manual may involve the collection of personal information such as face, fingerprint, license plate number, email, phone number, GPS. Please abide by your local laws and regulations while using the product.

Safety Precautions

The device must be installed, serviced and maintained by a trained professional with necessary safety knowledge and skills. Before you start using the device, please read through this guide carefully and make sure all applicable requirements are met to avoid danger and loss of property.

Storage, Transportation, and Use

- Store or use the device in a proper environment that meets environmental requirements, including and not limited to, temperature, humidity, dust, corrosive gases, electromagnetic radiation, etc.
- Make sure the device is securely installed or placed on a flat surface to prevent falling.
- Unless otherwise specified, do not stack devices.
- Ensure good ventilation in the operating environment. Do not cover the vents on the device. Allow adequate space for ventilation.
- Protect the device from liquid of any kind.
- Make sure the power supply provides a stable voltage that meets the power requirements of the device. Make sure the power supply's output power exceeds the total maximum power of all the connected devices.
- Verify that the device is properly installed before connecting it to power.
- Do not remove the seal from the device body without consulting Uniview first. Do not attempt to service the product yourself. Contact a trained professional for maintenance.
- Always disconnect the device from power before attempting to move the device.

- Take proper waterproof measures in accordance with requirements before using the device outdoors.

Power Requirements

- Install and use the device in strict accordance with your local electrical safety regulations.
- Use a UL certified power supply that meets LPS requirements if an adapter is used.
- Use the recommended cordset (power cord) in accordance with the specified ratings.
- Only use the power adapter supplied with your device.
- Use a mains socket outlet with a protective earthing (grounding) connection.
- Ground your device properly if the device is intended to be grounded.

Battery Safety

Please use batteries properly; otherwise, there is a risk of fire or explosion.

- Warning: Using incorrect battery models can lead to explosion.
- If you need to replace the battery, it is recommended that you go to an authorized service center or have it replaced under professional supervision. We shall not be held responsible for any issues arising from unauthorized battery replacement.
- When replacing the battery, be sure to use a battery of the same type as the original! Using the wrong model for replacement (such as certain types of lithium batteries) may cause safety protection to fail.
- Batteries must not be exposed to overheat environments such as sunlight, fire, as this may lead to fire, explosion, or combustion.
- Do not dispose of batteries in fire or heating appliances. Do not squeeze, bend, or cut batteries, as it may cause explosion.
- Do not expose batteries to extremely high or low temperatures, or to very low-pressure environments, as this may cause explosion or leakage of flammable liquid/gas.
- Dispose of the used battery according to your local regulations or the battery manufacturer's instructions.
- For products or the included remote control containing a button cell battery: Do not ingest the battery - chemical burn hazard! If swallowed, a button cell battery can cause severe internal burns within 2 hours and may be fatal. Precautions (including but not limited to):
  - Keep new and used batteries away from children.
  - Stop using the product and keep it away from children if the battery compartment is not securely closed.
  - If you suspect that a battery may have been swallowed or inserted inside any part of the body, seek immediate medical attention.

Network Security

Please take all necessary measures to enhance network security for your device.

The following are necessary measures for the network security of your device:

- Change default password and set strong password: You are strongly recommended to change the default password after your first login and set a strong password of at least nine characters including all three elements: digits, letters and special characters.
  - Do not include the account name or the reverse of the account name.
  - Avoid using consecutive characters, such as 123, abc, etc.
  - Do not use overlapping characters, such as 111, aaa, etc.
- Keep firmware up to date: It is recommended that your device is always upgraded to the latest version for the latest functions and better security. Visit Uniview's official website or contact your local dealer for the latest firmware.

The following are recommendations for enhancing network security of your device:

- Change password regularly: Change your device password on a regular basis and keep the password safe. Make sure only the authorized user can log in to the device.
- Enable HTTPS/SSL: Use SSL certificate to encrypt HTTP communications and ensure data security.
- Enable IP address filtering: Allow access only from the specified IP addresses.

- **Minimum port mapping:** Configure your router or firewall to open a minimum set of ports to the WAN and keep only the necessary port mappings. Never set the device as the DMZ host or configure a full cone NAT.
- **Disable the automatic login and save password features:** If multiple users have access to your computer, it is recommended that you disable these features to prevent unauthorized access.
- **Choose username and password discretely:** Avoid using the username and password of your social media, bank, email account, etc., as the username and password of your device, in case your social media, bank and email account information is leaked.
- **Restrict user permissions:** If more than one user needs access to your system, make sure each user is granted only the necessary permissions.
- **Disable UPnP:** When UPnP is enabled, the router will automatically map internal ports, and the system will automatically forward port data, which results in the risks of data leakage. Therefore, it is recommended to disable UPnP if HTTP and TCP port mapping have been enabled manually on your router.
- **Multicast:** Multicast is intended to transmit video to multiple devices. If you do not use this function, it is recommended you disable multicast on your network.
- **Check logs:** Check your device logs regularly to detect unauthorized access or abnormal operations.
- **Isolate video surveillance network:** Isolating your video surveillance network with other service networks helps prevent unauthorized access to devices in your security system from other service networks.
- **Physical protection:** Keep the device in a locked room or cabinet to prevent unauthorized physical access.
- **SNMP:** Disable SNMP if you do not use it. If you do use it, then SNMPv3 is recommended.

Learn More

You may also obtain security information under Security Response Center at Uniview's official website.

Avertissement de l'utilisation de la batterie

- Lorsque utiliser la batterie, évitez:
  - Température et pression d'air extrêmement élevées ou basses pendant l'utilisation, le stockage et le transport.
  - Remplacement de la batterie.
- Utilisez la batterie correctement. Mauvaise utilisation de la batterie comme celles mentionnées ici, peut entraîner des risques d'incendie, d'explosion ou de fuite liquide de gaz inflammables.
  - Remplacer la batterie par un type incorrect;
  - Disposer d'une batterie dans le feu ou un four chaud, écraser mécaniquement ou couper la batterie;
- Disposer la batterie utilisée conformément à vos règlements locaux ou aux instructions du fabricant de la batterie.

Regulatory Compliance

FCC Statements

This device complies with Part 15 of the FCC Rules. Operation is subject to the following two conditions: (1) this device may not cause harmful interference, and (2) this device must accept any interference received, including interference that may cause undesired operation.

Visit https://global.uniview.com/Support/Download_Center/Product_Installation/Declaration/ for SDoC.

Caution: The user is cautioned that changes or modifications not expressly approved by the party responsible for compliance could void the user's authority to operate the equipment.

NOTE: This equipment has been tested and found to comply with the limits for a Class A digital device, pursuant to part 15 of the FCC Rules. These limits are designed to provide reasonable protection against harmful interference when the equipment is operated in a commercial environment. This equipment generates, uses, and can radiate radio frequency energy and, if not installed and used in accordance with the instruction manual, may cause harmful interference to radio communications. Operation of this

equipment in a residential area is likely to cause harmful interference in which case the user will be required to correct the interference at his own expense.

LVD/EMC Directive

This product complies with the European Low Voltage Directive 2014/35/EU and EMC Directive 2014/30/EU.

WEEE Directive–2012/19/EU

The product this manual refers to is covered by the Waste Electrical & Electronic Equipment (WEEE) Directive and must be disposed of in a responsible manner.

Battery Regulation- (EU) 2023/1542

Battery in the product complies with the European Battery Regulation (EU) 2023/1542. For proper recycling, return the battery to your supplier or to a designated collection point.

Waterproof Requirements

To effectively protect the device from water ingress, please ensure waterproof treatment is applied to all cables and interfaces. The following steps are for reference only. Actual construction should be flexibly adjusted according to the on-site environment.

Device failures caused by inadequate waterproofing measures are not covered under the warranty. Thank you for your understanding and cooperation.

1 Pre-processing

1. Before applying waterproofing, ensure all necessary cables are connected, and trim off the exposed copper wires from any unused cables.
2. Wrap the cables with insulation tape (purchased separately).

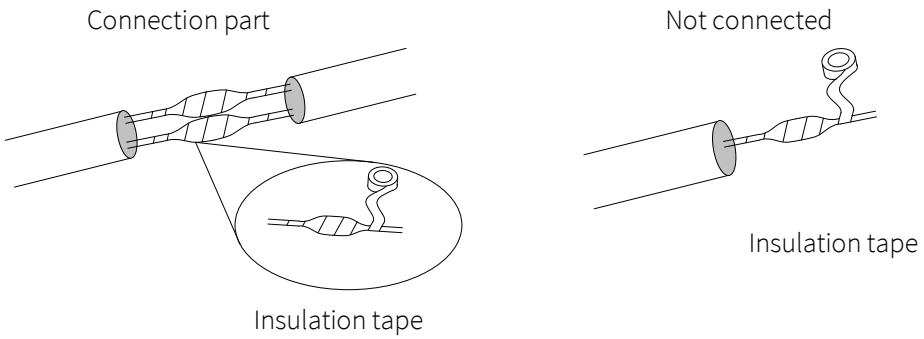

3. Use a DC plug to waterproof any unused DC interfaces. Ignore this step if the device does not have this interface.

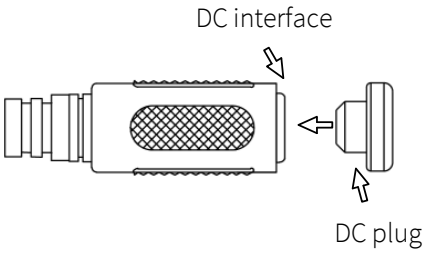

2 Waterproofing

1. Use the waterproof components included in the box to waterproof the network cable. Slide the waterproof components onto the cable in the order shown in the diagram.

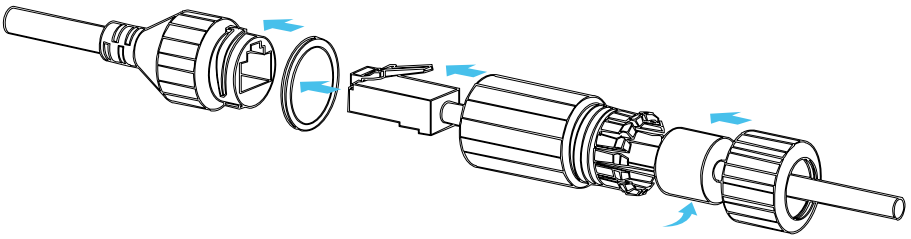

2. Use waterproof tape (purchased separately) to waterproof the cables and interfaces.
   (1) Fully stretch the waterproof tape towards both ends.
   (2) Wrap the stretched tape tightly around the cable connection part or cable ends. Make sure the tape is fully stretched during the process.
   (3) Tighten the tape at both ends to prevent water ingress.

Wrap the cables separately first.

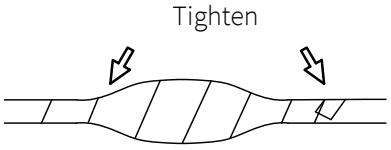

Wrap all cables together.

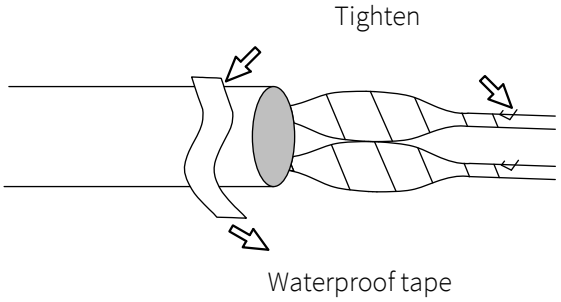

3. (Optional) Place the waterproofed cable into a waterproof junction box (purchased separately).

CAUTION!

- All cable connections must not be exposed and must not come into contact with liquid water.
- Opened devices must be restored and securely fastened.
- Place the power adapter inside the power distribution box.

1 Packing List

Contact your local dealer if the package is damaged or incomplete. The package contents may vary with device model.

No.	Name	Qty	Unit
1	Camera	1	PCS
2*	Bracket adapter	1	PCS
3*	Waterproof components(1)	1	Set
4*	Mount accessories(2)	1	Set
5	Product documents	1	Set

Remarks:

* means optional and supplied with certain models only.

(1) Including one or more waterproof components such as tape and plug.

(2) Including one or more items from drill template, bracket adapter, wrench, etc.

2 Safety Instructions

The device and its accessories must be installed and maintained by a trained professional with necessary safety knowledge and skills. Be sure to read this guide carefully before use and strictly comply with the safety regulations during operation.

2.1 Precautions

- Avoid environments with extremely low and high temperatures, humidity, dust, vibration, etc. during installation and use. Keep away from heating, stoves, underside of bridges, etc. See the latest product datasheet for the detailed temperature and humidity requirements.
- Do not install the device in environments with strong electromagnetic interference, such as the circuit breaker area of a substation, near area of the power transmission lines, main transmission direction of the broadcast tower antenna, and near area of track pantograph, radar, and base station antenna. Otherwise, the device may be damaged.
- Do not use the device in environments with strong corrosiveness, strong acids, and high salinity and alkalinity, such as offshore islands, offshore platforms, chemical industry work areas, and near shore area within 5 kilometers of the coast. Ensure that appropriate corrosion protection measures are taken if installation in special environments is required.
- During the process of transportation, special attention is required for the protection of the transparent dome cover to prevent friction, scratch and contamination. In order to keep the cover clean, do not remove the protective film on the cover during mounting. After mounting is finished, remove the film before the device is powered on.
- Before installation, make sure the wall or ceiling is strong enough to withstand the device.
- Do not overbend or drag cables during installation; otherwise, poor cable contact may cause malfunction.
- When connecting to an external interface, use an existing connection terminal, and ensure that the cable terminal (latch or clamp) is in good condition and properly fastened.
- When connecting the alarm input interface, make sure the high level signal of the alarm input does not exceed 5V DC.
- Make sure the length of the power cable between the power adapter and the device is not too long; otherwise, the voltage of the device is lowered, causing the device to work abnormally.
- Static electricity on the dome cover is a common phenomenon. To prevent the cover from attracting dust, it is recommended to wipe the dome cover surface using anti-static gloves after removing the transparent protective film.
- Protect the power cord from being trampled or crushed, especially at the plug, outlet, and the connection points between the cable and the device. A separate ground terminal must always be connected to ground.
- Make sure that the power has been disconnected before you maintain or move the device.
- Some devices are equipped with a white-light illuminator. For these devices, note the following.

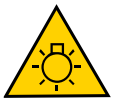	Do not stare at operating lamp. May be harmful to the eyes. Ne pas regarder la lampe de fonctionnement. Peut être nocif pour les yeux.

- Some devices are equipped with an infrared illuminator. For these devices, note the following.

	Avoid eye exposure. Use appropriate shielding or eye protection. Évitez l' exposition aux yeux. Utilisez un blindage approprié ou une protection oculaire.

2.2 Maintenance

- If there is dust on the front glass surface, remove the dust gently using an oil-free brush or a rubber dust blowing ball.
- If there is grease or a dust stain on the front glass surface, clean the glass surface gently from the center outward using anti-static gloves or an oil-free cloth. If the grease or the stain still remains, use anti-static gloves or an oil-free cloth dipped with detergent and clean the glass surface gently.
- Do not use organic solvents (benzene, alcohol, etc.) to clean the transparent dome cover.
- Make sure the cleaning cloth is clean itself.

3 Appearance

3.1 Dimensions

The figure below is for illustrative purpose only. The appearance may vary with device model. Please refer to the actual device.

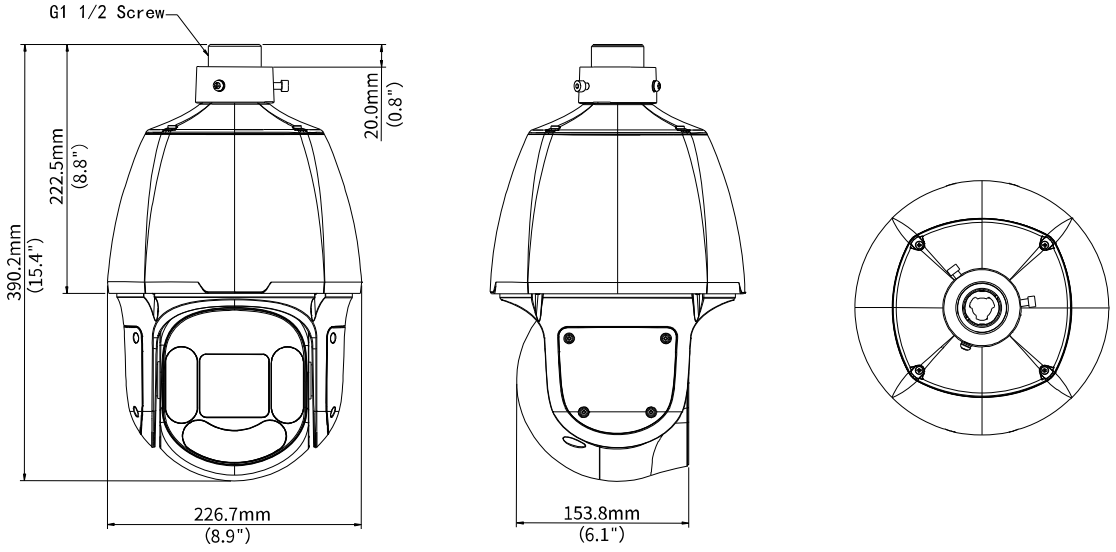

3.2 Cable Connection

The tail cables may vary by device model. The example below shows the full tail cable version. Please refer to the actual device.

See the attached labels for specific wire functions.

Type	Description
Power interface	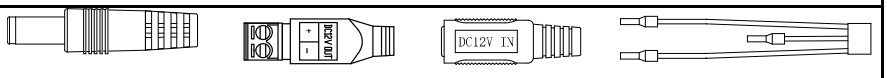

Alarm interface		**NOTE!** Available in a pre-stripped configuration on certain models.
Audio interface	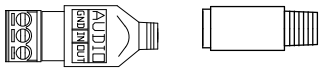	**NOTE!** Available in a pre-stripped configuration on certain models.
RS485 interface		**NOTE!** Available in a pre-stripped configuration on certain models.
Reset button	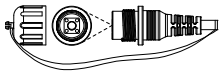	**NOTE!** Within 10 minutes of power-up (invalid after 10 minutes), press and hold the Reset button for more than 10 seconds. The device will restart and restore factory default settings.
Network interface		
BNC interface	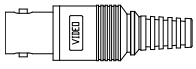	
Fiber interface	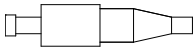	
DIP switch	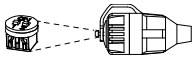	

4 Mount Your Camera

4.1 Check Before Installation

1 Check package contents

Before installation, check against the packing list to ensure all parts are complete.

2 Installation position strength

Different installation methods have varying strength requirements for the installation position. Ensure the installation position is strong enough to withstand the device. Strengten the position if needed.

3 Lightning protection requirements

Select proper lightning protection devices for the power supply, audio and video cables, and RS485 cables. Also, ensure the device is properly grounded.

4 Accessories

Accessories like wall mount bracket are required for wall mount. Please purchase the accessories according to our company's recommendation list.

4.2 (Optional) Install the Micro SD Card

You need to install a Micro SD card first if you want to use the edge storage function. To install the Micro SD card, you need to remove the rear cover.

NOTE!

Please consult your dealer or technical support for the recommended SD card specifications.

The figure below is for illustrative purpose only. The actual card slot position may vary.

WARNING!

Before you insert or remove the Micro SD card, be sure to disconnect power and wait till the camera stops operation; otherwise, the camera and the Micro SD card may be damaged.

1. Remove the 4 screws on the rear cover.
2. Insert the Micro SD card into the slot.
3. Check that the sealing ring is in position.
4. Put the rear cover back in place, and then tighten the screws.

Figure 4-1 Model A

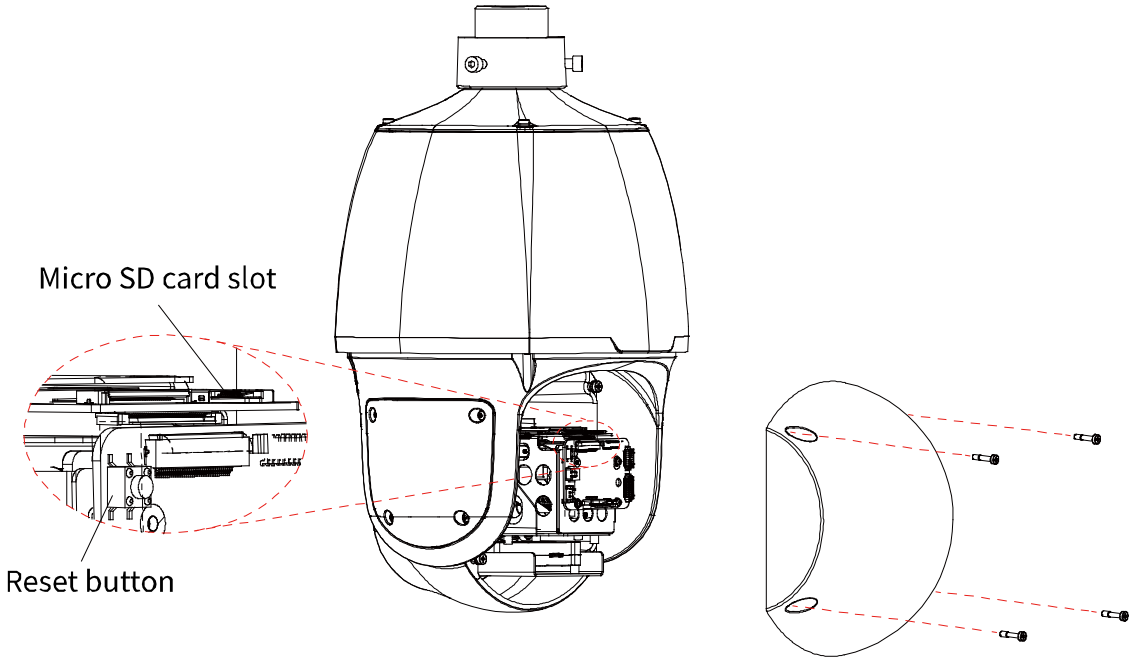

Figure 4-2 Model B

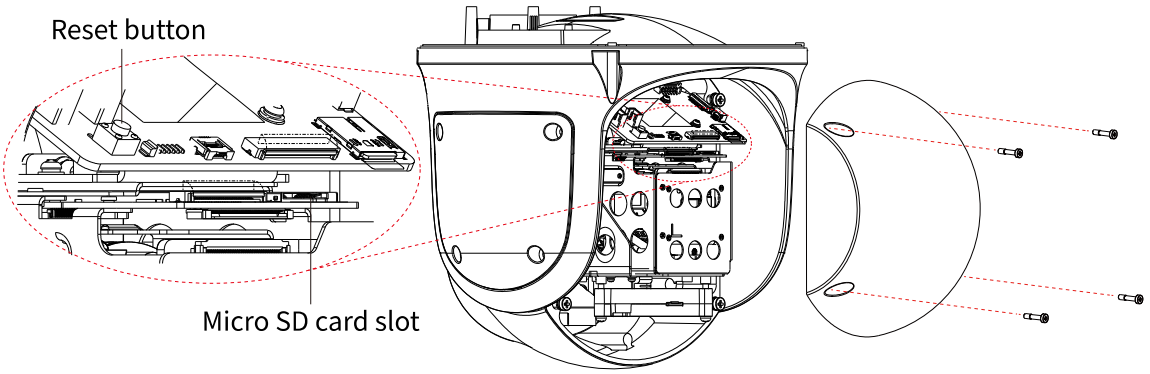

NOTE!

To restore the device to factory defaults:

Follow the Step 1 to remove the rear cover. Press and hold the raised circular reset button for at least 10 seconds. Then, wait for the device to restart and restore to factory defaults. This operation is effective only wihtin 10 minutes after the device is powered on.

4.3 Mount the Camera

The figures below are for illustrative purpose only. The actual device may vary.

4.3.1 Wall Mount

CAUTION!

- Make sure that the screws at each junction of the bracket and the bracket adapter are tightened in place.
- Make sure to perform waterproof treatment on the connection part between the camera and bracket, wall veneer gaps, and cable outlets on the wall.
- The following takes the concealed installation as an example. For open installation, lead the cables directly through the cable outlet on the mounting bracket.

1. Locate holes and install the expansion bolts.
   (1) Locate holes according to the mounting holes on the bracket.
   (2) Select a drill bit that matches the outer diameter of the expansion bolt, and then drill holes with reference to the length of the expansion bolt.
   (3) Knock the expansion bolts into the holes until they are fully tightened.

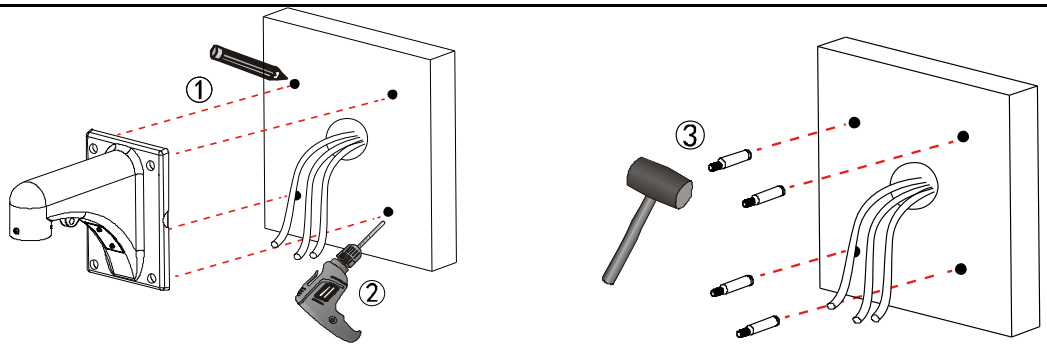

2. Secure the bracket.

   (1) Remove the maintenance window cover on the bracket and lead cables out of the window.

   (2) Align the bracket with the holes, and then insert the bracket through the expansion bolts. Install the flat washers, spring washers, and nuts in sequence, and then use a wrench to tighten the 4 nuts to secure the bracket.

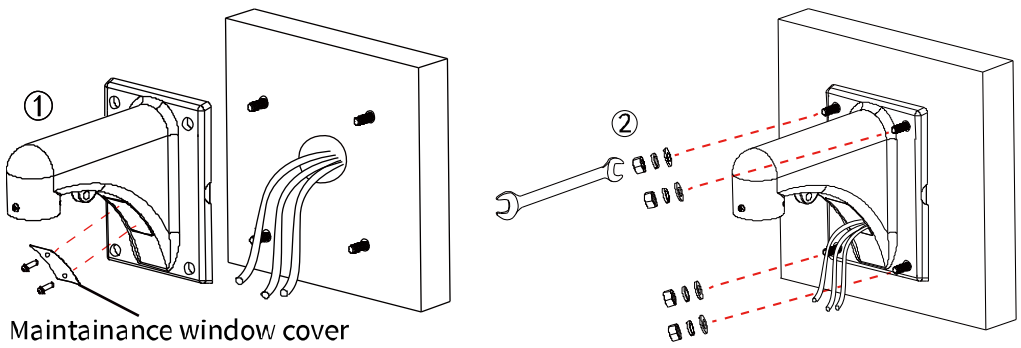

Note:

Ensure that the flash washsers and spring washers are installed in place; otherwise, the screw components may not be fully tightened.

3. Screw the bracket adapter into the bracket's connector, and then tighten the M4 screw.

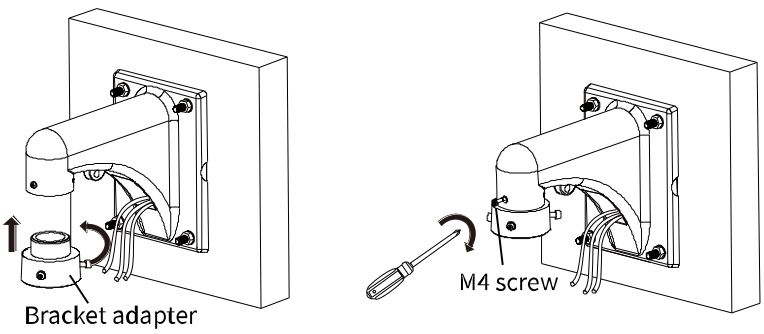

4. Hang the other end of the safety rope on the bracket, and then lead the tail cables through the bracket

5. Align the screw on the top of the camera with the notch on the bracket adapter, push the camera up, and then rotate the camera clockwise until fully tightened.

adapter and out of the maintenance window.

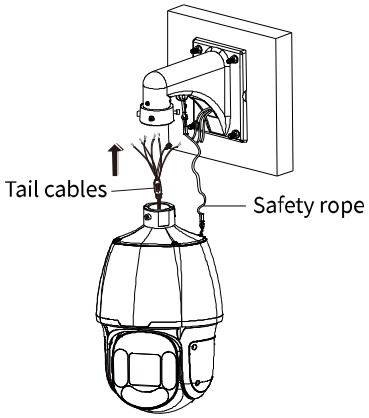

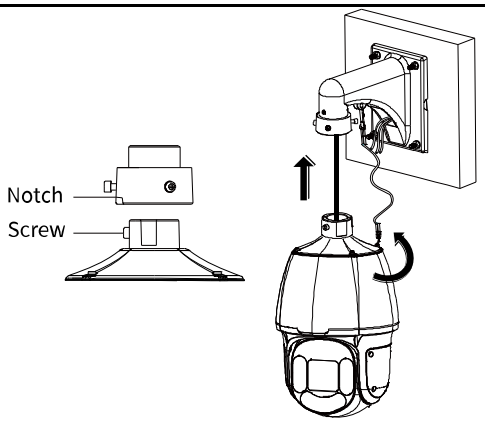

6. Tighten the two M6 screws on the bracket adapter.

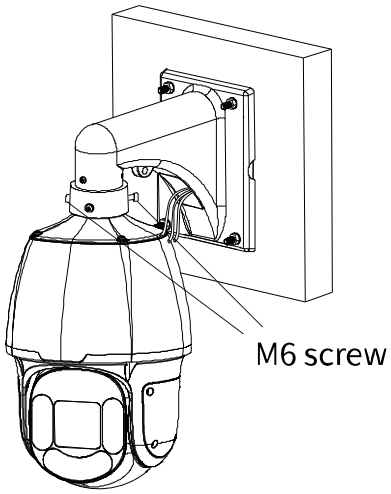

7. Connect all cables.

   (1) Connect the tail cables with the cables in the wall, and then hide them into the bracket.

   (2) Reinstall the maintenance window cover back in place and fasten the screws.

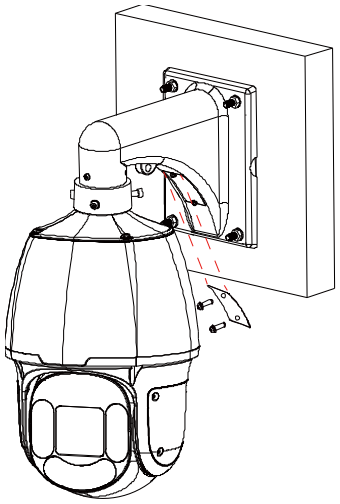

4.3.2 Pendant Mount

CAUTION!

- Pendant mount bracket is NOT intended for outdoor use. If used outdoors in special circumstances, be sure to apply waterproof treatments. Please note that the user shall assume full responsibility for any damage caused by improper waterproofing measures.
- The user-customized pole must meet the waterproof requirements and be kept away from water.
- The tail cable must be waterproofed and must not be exposed to the outside. The area where the tail cable is located must be waterproofed to avoid soaking the tail cable in water. The connection between the camera and the pole must be sealed.

1. Locate holes according to the mounting holes on the bracket. 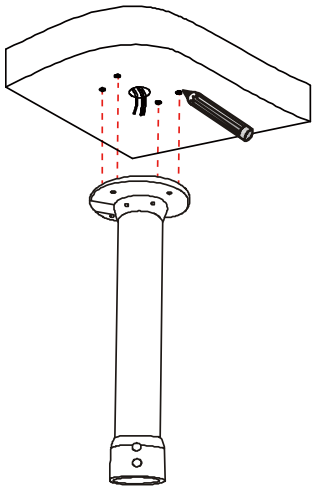	2. Install the expansion bolts. (1) Select a drill bit that matches the outer diameter of the expansion bolt, and then drill holes with reference to the length of the expansion bolt. (2) Knock the expansion bolts into the holes until they are fully tightened. 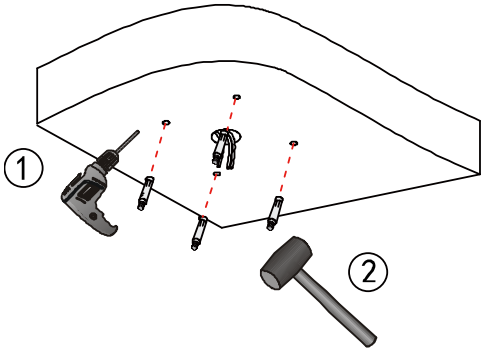
3. Lead the cables through the bracket. Align the bracket with the holes, and then insert the bracket through the expansion bolts. Install the flat washers, spring washers, and nuts in sequence, and then use a wrench to tighten the 4 nuts to secure the bracket.	4. Screw the bracket adapter into the bracket's connector.

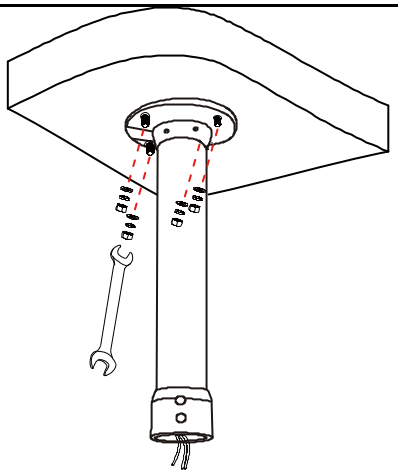

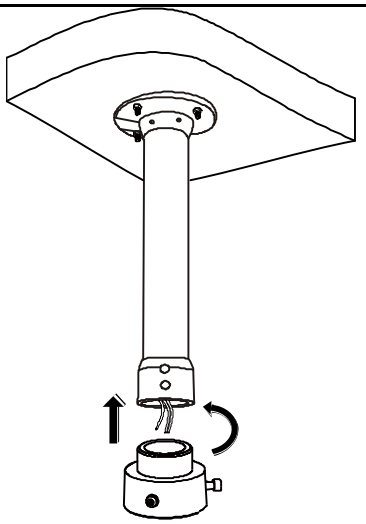

5. Tighten the screw on the bracket connector.

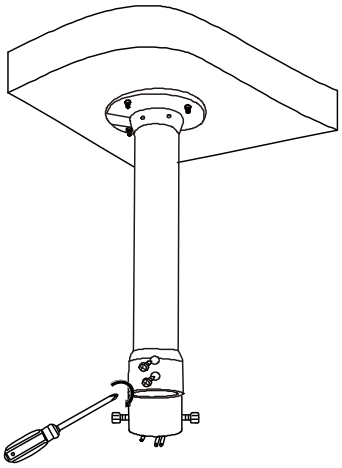

6. Connect all cables and follow the Step 5 & 6 in Chapter 4.3.1 Wall Mount to secure the camera with the bracket adapter.

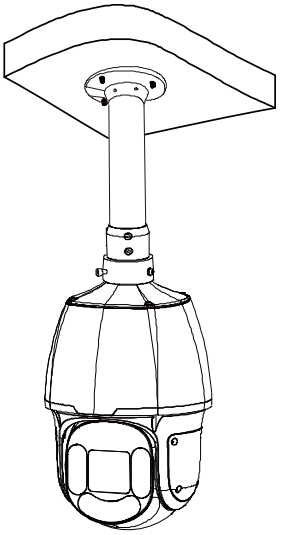

5 Startup

Check that the device is properly installed, and then connect the device to power to start it up.

The device performs a self-test each time the device is powered on. Please wait for the self-test to complete before operating the device.

6 Web Login

Default IP address:

192.168.1.13

Default username/password:

admin/123456

Note:

For security, please set a strong password of at least nine characters including uppercase and lowercase letters, digits, and special characters. You are strongly recommended to regularly change the device password and keep it secure to ensure that only authorized users can log in.