Thermal & Optical Bi-spectrum Network Dome Camera

TIC3612SA-F3-4F4AC-I1

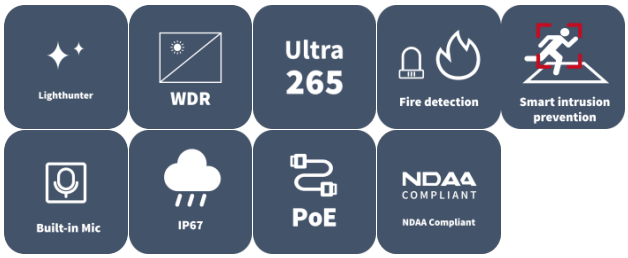

Features

- Thermal & optical dual-spectrum image, dual video with single IP address, adaptable to various scenes
- 1/2.8" target surface, high sensitivity sensor, suitable for starlight monitoring
- Thermal module supports reliable fire detection and fire shield area
- Thermal module supports temperature detection and cold&hot spot tracking, which highlights abnormal temperatures and links to alarm
- Thermal & optical dual-spectrum smart intrusion prevention can be enabled simultaneously : cross line, enter area, leave area, intrusion
- Optical module supports smog recognition, which can help with fire alarm reconfirmation
- Supports picture-in-picture mode, real-time contrast live, more convenient and clear
- Supports audio and light alarm, with red and blue warning lights built in
- Ultra 265, H.265, H.264, MJPEG
- Max 2688 × 1520@30 fps in the optical module and max 960P@30 fps in the thermal module
- DC 12 V ± 25% or PoE power supply
- Alarm 2 in and 2 out, audio 1 in and 1 out, micro SD, up to 512 GB

Specifications

Channel	Optical	Thermal
Camera		
Max Resolution	4 MP	960P
Original Resolution	N/A	256 × 192
Sensor	1/2.8" CMOS	Vanadium oxide uncooled focal plane arrays
Min. Illumination	Colour: 0.003 lux (F1.6, AGC ON) B/W: 0.002lux(F1.6,AGC ON) 0 lux with IR	N/A
Day/Night	IR-cut filter with auto switch (ICR)	N/A
Pixel Size	N/A	12 um
NETD		< 50 mk@F1.0@25 ℃
Shutter	Auto/Manual, 1 to 1/100000 s	
WDR	120 dB	
S/N	>56 dB	
Lens		
Focal Length	4mm	3 mm
Iris	F1.6	F1.0
Field of View (H)	74.9°	58.0°
Field of View (V)	44.4°	42.5°
Field of View (D)	97.4°	72°
DORI		
DORI Distance (Detect)	90.0m(295.3ft)	N/A
DORI Distance (Observe)	36.0m(118.1ft)	N/A
DORI Distance (Recognize)	18.0m(59.1ft)	N/A
DORI Distance (Identify)	9.0m(29.5ft)	N/A
Illuminator		
Wavelength	750 nm	N/A
Illumination Distance (IR)	30m	N/A
Light On/Off Control	Auto/Manual	N/A
Video		
Frame Rate	4MP(2688*1520), Max 30fps	960P(1280*960), Max 30fps
Video Compression	Ultra 265, H.265, H.264, MJPEG	
Video Bit Rate	128 Kbps to 16 Mbps	
U-code	Support	
ROI	Support	
Video Stream	Triple streams	
OSD	Up to 8 OSDs	
Privacy Mask	Up to 8 areas (8 blacks/ 8 mosaics)	N/A
Image		
White Balance	Auto, Outdoor, Fine tune, Sodium lamp, Locked, Auto2	N/A

Digital Noise Reduction	2D/3D DNR	
Flip	Normal, Flip vertical, Flip horizontal, 180°, 90° Clockwise, 90° Anti-clockwise	
HLC	Support	N/A
BLC	Support	N/A
Defog	Digital defog	N/A
Palette	N/A	puce, rain, fusion, mazarine, medical, arctic, lava, color 2, color 1, green hot, red hot, black hot, ice hot, depict hot, rainbow 3, rainbow 2, rainbow 1, hot iron, iron oxide red, white hot
Intelligent		
Smart Intrusion Prevention	Cross line detection, intrusion detection, enter area detection, leave area detection (support false alarm filtering and the classification of human, non-motor vehicle and vehicle)	Cross line detection, intrusion detection, enter area detection, leave area detection (support false alarm filtering and the classification of human and vehicle)
Smoke Detection	Support	N/A
Temperature Measurement Accuracy		±8 ℃ (±14.4 ℉) or ±8% (whichever is greater)
Temperature Range		Selectable between -20 ℃ to 150 ℃ (-4 ℉ to 302 ℉) and 100 ℃ to 550 ℃ (212 ℉ to 1022 ℉)
Detection distance for vehicles (4 × 1.4 meters)		60m
Detection distance for personnel (1.8 × 0.5 meters)		30m
Events		
Fire Detection	N/A	Support
Basic Detection	Motion detection, Tampering alarm, Audio detection	N/A
General Function	Watermark, IP address filtering, Access policy, ARP protection, RTSP authentication, User authentication, HTTP authentication, Alarm input, Alarm output	
Detection distance for fire (0.1 × 0.1 meters)	N/A	13m
Detection distance for temperature (0.1 × 0.1 meters)	N/A	8m
Audio		
Audio Compression	G.711U, G.711A	
Audio Bitrate	128 Kbps	
Two-way Audio	Support	
Suppression	Support	
Sampling Rate	16KHZ	
Storage		
Edge Storage	MicroSD, up to 512 GB	

Network Storage	ANR	
Network		
Protocols	IGMP, RTP, SMTP, IPv4, IPv6, ICMP, ARP, TCP, UDP, DHCP, PPPoE, RTSP, RTCP, RTMP, DNS, DDNS, NTP, FTP, UPnP, HTTP, HTTPS, 802.1x, SNMP, QoS, SSL/TLS, SSH	
Compatible Integration	ONVIF (Profile S, Profile G, Profile T), API, SDK	
User/Host	Up to 32 users. 3 user levels: administrator, common user and operator	
Client	EZStation, UNV-Link, UNV-Link Pro	
Web Browser	Plug-in required live view: IE 10+, Chrome 45+, Firefox 52+, Edge 79+	
Interface		
Built-in Mic	Support	
Built-in Speaker	Support	
Audio I/O	1 Input: impedance 1 kΩ, amplitude 2.5 V [p-p], 1 Output: impedance 600 Ω, amplitude 2 V [p-p]	
Alarm I/O	2/2	
Serial Port	1 × RS485	
Network	1 × RJ45 10 M/100 M Base-TX Ethernet	
Video Output	N/A	1 BNC (for debugging)
Certification		
EMC	CE-EMC (EN 55032: 2015+A1:2020,EN 61000-3-3: 2013+A1: 2019,EN IEC 61000-3-2: 2019+A1: 2021,EN 50130-4:2011+A1:2014) FCC (FCC CFR 47 part15 B, ANSI C63.4-2014)	
Safety	CE LVD (EN IEC 62368-1:2020+A11:2020) UL (UL 62368-1, 2nd Ed., Issue Date: 2014-12-01)	
Environment	CE-RoHS (2011/65/EU;(EU)2015/863); WEEE (2012/19/EU); Reach (Regulation (EC) No 1907/2006)	
Protection	IP67 (IEC 60529:1989+AMD1:1999+AMD2:2013)	
General		
Power	DC12V(±25%), PoE(IEEE802.3af)	
Power Consumption	Max 12W	
Power Interface	Ø5.5 mm coaxial power plug	
Dimensions	Φ129 x 114 mm(Φ5.08" x 4.49")(Φ x H)	
Weight	0.72kg(1.6lb)	
Working Environment	-40 ℃ to 70 ℃ (-40 ℉ to 158 ℉), Humidity: ≤ 95% RH (non-condensing)	
Storage Environment	-40 ℃ to 70 ℃ (-40 ℉ to 158 ℉), Humidity: ≤ 95% RH (non-condensing)	
Surge Protection	6 KV	
Reset Button	Support	
RTC	Support	
Web Client Language	22 Languages: Traditional Chinese, English, Simplified Chinese, Polish, German, Russian, French, Korean, Dutch, Czech, Portuguese (Europe), Portuguese (Brazil), Japanese, Thai, Turkish, Spanish (Latin America), Spanish (Europe), Hungarian, Italian, Vietnamese, Arabic, Slovak	
Live View		
Maximum Bitstream	35	
Maximum Bandwidth	50 Mbps	
OSD Font	Vector	
OSD Color	Support	

OSD Character Number	40
Other	
Corridor Mode	Support
Software Version	Q6202

DRI Description

The optimal detection, recognition, and identification distances are calculated according to Johnson's Criteria.

Detection Range: In order to distinguish an object from the background, the object must be covered by 1.5 or more pixels.

Recognition Range: In order to classify the object (animal, human, vehicle, etc.), the object must be covered by 6 or more pixels.

Identification Range: In order to identify the object and describe it in details, the object must be covered by 12 or more pixels.

Lens	Detection Range (Vehicles:4.0 × 1.4 m)	Detection Range (Humans:1.8 × 0.5 m)	Recognition Range (Vehicles : 4.0 × 1.4 m)	Recognition Range (Humans : 1.8 × 0.5 m)	Identification Range (Vehicles : 1.4 × 4.0 m)	Identification Range (Humans: 1.8 × 0.5 m)
2.1mm	207m	83m	52m	21m	30m	12m
3mm	296m	119m	74m	30m	49m	17m
7mm	690m	277m	173m	69m	99m	40m

Dimensions

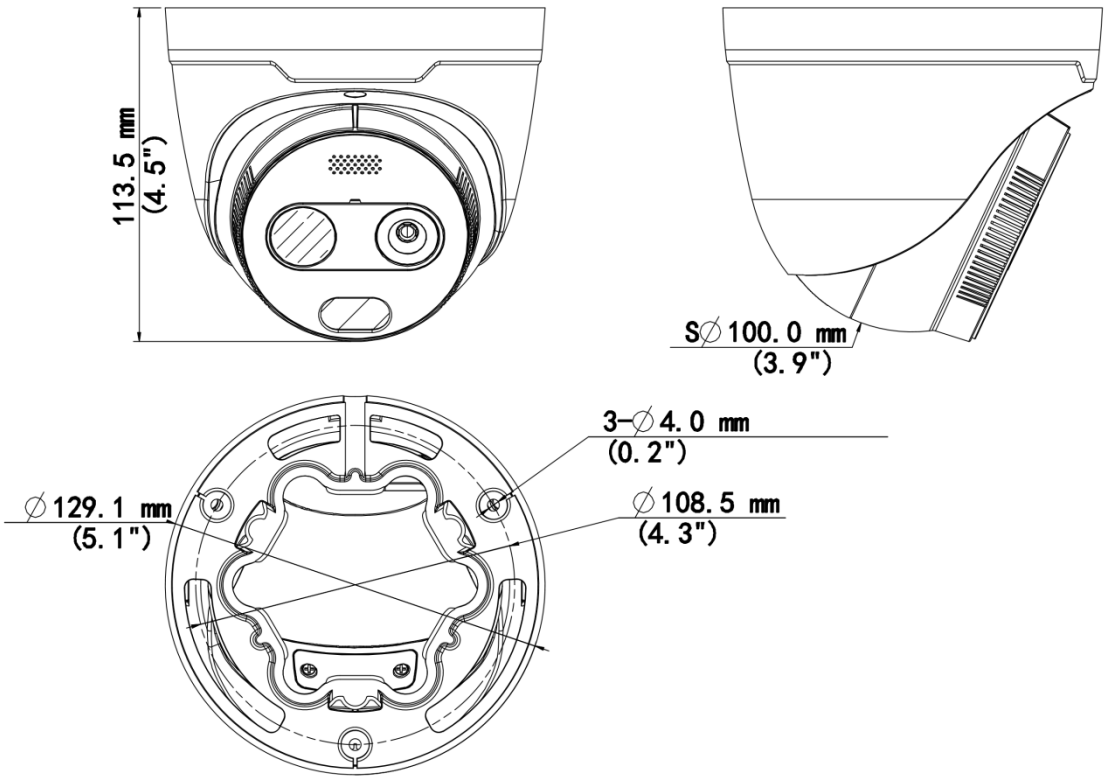

Accessories

TR-JB03-H-IN Turret Junction Box(Support Wiring From Behind)	**TR-A01-IN** NPT 3/4'' Waterproof Cable Gland	**TR-JB07/WM03-F-IN** Wall Mounting Assembling Bracket with Back Hole For 3 Inches Dome
TR-WM03-B-IN Wall Mounting Assembling Bracket For 3 Inches Hemisphere	**TR-UP06-IN** Universal Pole Mounting Bracket	**TR-UC08-C** Bullet&Dome Corner Mounting Bracket
		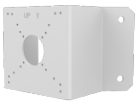

Unlimited New View

Zhejiang Uniview Technologies Co., Ltd.

http://www.uniview.com

overseasbusiness@uniview.com; globalsupport@uniview.com

No. 369, Xietong Road, Xixing Sub-district, Binjiang District, Hangzhou City, 310051, Zhejiang Province, China

©2024-2026 Zhejiang Uniview Technologies Co., Ltd. All rights reserved.

*Product specifications and availability are subject to change without notice.

Despite our best efforts, technical or typographical errors may exist in this document. Uniview cannot be held responsible for any such errors and reserves the right to change the contents of this document without prior notice.