5MP Panoramic IR Fixed Fisheye Network Camera

IPC815SB-ADF14K-I0

Features

- High quality image with 5 MP, 1/2.8" CMOS sensor
- 5 MP (2592 × 1944)@30/25 fps
- Ultra 265, H.265, H.264, MJPEG
- 120 dB true WDR technology enables clear image in strong light scene
- Built-in dual-mic, has better sound performance
- Alarm I/O: 1/1, audio I/O: 1/1
- Smart IR, up to 10 m (32.8 ft.) IR distance
- MicroSD, up to 1 TB
- IK10 vandal resistant
- IP66 protection
- Supports PoE power supply

Specifications

Model	IPC815SB-ADF14K-I0
Camera	
Max Resolution	5 MP
Sensor	1/2.8" CMOS
Min. Illumination	Color: 0.01 Lux (F2.0, AGC ON), 0 Lux with IR
Day/Night	IR-cut filter with auto switch (ICR)
Shutter	Auto/Manual, 1 ~ 1/100000s
S/N	>52 dB
WDR	120 dB
Lens	
Focal Length	1.4 mm
Field of View (H)	180°
Iris Type	Fixed
Iris	F2.0
Field of View (V)	180°
Field of View (D)	180°
Lens Type	Fixed
Video	
Main Stream	5 MP (2592 × 1944), max. 30 fps
Sub Stream	Fisheye View: 1080P (1920 × 1080): max. 30 fps; 720P (1280 × 720), max. 30 fps
Third Stream	Fisheye View: D1 (720 × 576), max. 30 fps; 640 × 360, max. 30 fps; 2CIF (704 × 288), max. 30 fps; CIF (352 × 288), max. 30 fps
Video Compression	Ultra 265, H.265, H.264, MJPEG
H.264 Code Profile	Baseline profile, Main profile, High profile
Video Bit Rate	128 Kbps to 16 Mbps
U-code	Support
OSD	Up to 8 OSDs
Privacy Mask	Up to 4 areas
ROI	Support
Video Stream	Triple streams
DORI	
DORI Distance (Lens)	1.4 mm
DORI Distance (Detect)	31.5 m (103.4 ft.)
DORI Distance (Observe)	12.6 m (41.3 ft.)
DORI Distance (Recognize)	6.3 m (20.7 ft.)
DORI Distance (Identify)	3.2 m (10.5 ft.)
Illuminator	
Supplemental Light	IR
Illumination Distance (IR)	10 m (32.8 ft.)
IR On/Off Control	Auto/Manual
Wavelength	850 nm

Live View Display	
Hardware Decoding	N/A
Software Decoding	Ceiling mount: fisheye view, 360° panorama + 1PTZ, 180° panorama view, fisheye + 3PTZ, fisheye+4PTZ, fisheye + 8PTZ,360° panorama + 6PTZ Table mount: fisheye view, 360° panorama + 1PTZ, 180° panorama view, fisheye + 3PTZ, fisheye+4PTZ, fisheye + 8PTZ,360° panorama + 6PTZ Wall mount: fisheye view, 180° panorama view, 180° panorama view + 3PTZ, 180° panorama view + 4PTZ, 180° panorama view + 8PTZ
Image	
White Balance	Auto, Outdoor, Fine tune, Sodium lamp, Locked, Auto2
Smart IR	Support
Digital Noise Reduction	2D/3D DNR
Flip	Normal, Flip vertical, Flip horizontal, 180°
Dewarping	N/A
HLC	N/A
BLC	Support
Defog	Digital defog
Image Stabilization	N/A
Intelligent	
Statistical Analysis	Heat map (Working with management platform)
Events	
Basic Detection	Motion detection, Tampering alarm, Audio detection
General Function	Watermark, IP address filtering, Access policy, ARP protection, RTSP authentication, User authentication, HTTP authentication
Audio	
Audio Compression	G.711U, G.711A, AAC-LC
Audio Bitrate	G.711U/G.711A: 64 kbps, AAC-LC: 128 kbps
Two-way Audio	Support
Suppression	Support
Sampling Rate	G.711U/G.711A: 8 kHz, AAC-LC: 8 kHz, 16 kHz, 48 kHz
Storage	
Edge Storage	MicroSD, up to 1 TB
Network Storage	ANR, NAS (NFS)
Network	
Protocols	IPv4, IPv6, IGMP, ARP, TCP, UDP, DHCP, PPPoE, RTP, RTSP, RTCP, RTMP, DNS, DDNS, NTP, FTP, HTTP, HTTPS, SMTP, 802.1x, SNMP, QoS
Compatible Integration	API, SDK, ONVIF (Profile S, Profile G, Profile T, Profile M)
User/Host	Up to 32 users. 3 user levels: administrator, common user and operator
Security	Password Protection, Strong Password, HTTPS Encryption, Export Operation Logs, Basic and Digest Authentication for RTSP, Digest Authentication for HTTP, TLS 1.2, WSSE and Digest Authentication for ONVIF
Client	EZStation, APP
Web Browser	Plug-in required live view: IE 10+, Chrome 45+, Firefox 52+, Edge 79+

Interface	
Audio I/O	1 Input: impedance 35 kΩ, amplitude 2 V [p-p], 1 Output: impedance 600 Ω, amplitude 2 V [p-p]
Alarm I/O	1/1
Serial Port	N/A
Built-in Mic	Built-in dual-mic
Built-in Speaker	N/A
Network	1 × RJ45 10 M/100 M Base-TX Ethernet
Video Output	N/A
Certification	
EMC	FCC CFR 47 Part 15 EN 55032:2015 EN 55024:2010 EN 61000-3-2:2014 EN 61000-3-3-2013
Safety	IEC 62368-1 EN 62368-1 UL 62368-1
Environment	CE-RoHS (2011/65/EU;(EU)2015/863); WEEE (2012/19/EU); Reach (Regulation (EC) No 1907/2006)
Protection	IP66 (IEC 60529-2013) IK10 (IEC 62262:2002)
General	
Power	DC 12 V±25%, PoE (IEEE 802.3af)
Power Consumption	Max. 8.5 W
Power Interface	Ø5.5 mm coaxial power plug
Dimensions	Ø125 mm × 43.7 mm (Ø4.9" × 1.7") (Ø × H)
Weight	0.36 kg (0.79 lb.)
Material	Metal + Plastic
Working Environment	-30 ℃ to 60 ℃ (-22 ℉ to 140 ℉), Humidity: ≤ 95% RH (non-condensing)
Storage Environment	-30 ℃ to 60 ℃ (-22 ℉ to 140 ℉), Humidity: ≤ 95% RH (non-condensing)
Surge Protection	4 KV
Reset Button	Support
Web Client Language	20 Languages: Traditional Chinese, English, Simplified Chinese, Polish, German, Russian, French, Korean, Dutch, Czech, Portuguese (Europe), Portuguese (Brazil), Japanese, Thai, Turkish, Spanish (Latin America), Spanish (Europe), Hungarian, Italian, Vietnamese

Dimensions

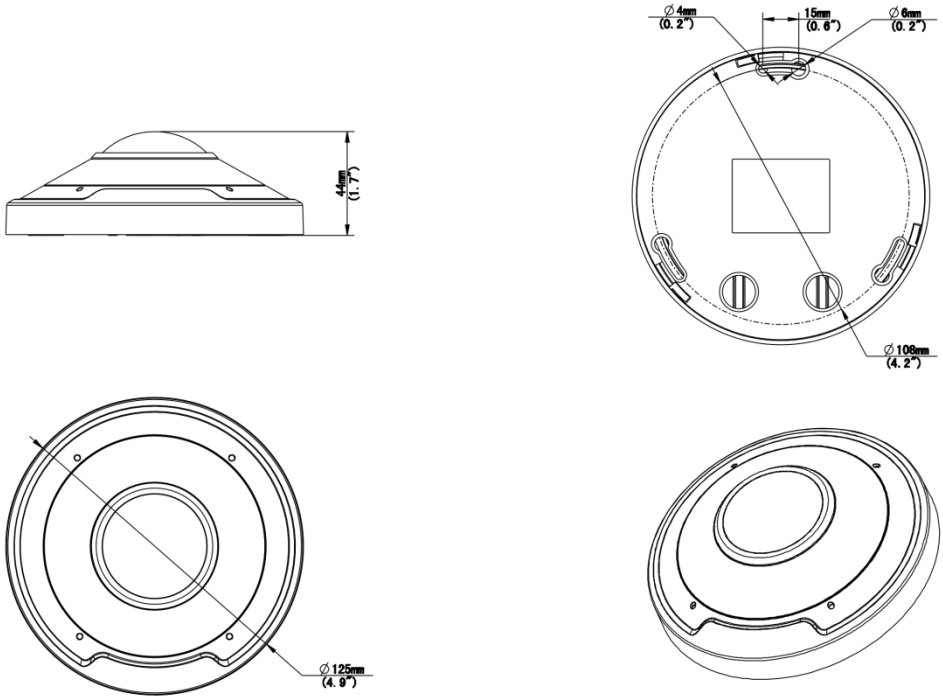

Accessories

TR-JB03-H-IN-V2 Turret Junction Box(Support Wiring From Behind)	TR-A01-IN NPT 3/4'' Waterproof Cable Gland	TR-SE24-IN Dome Pendent Mounting Pole 200mm
TR-SE24-A-IN Dome Pendent Mounting Pole 500mm	**TR-CM24-IN** Dome Pendent Mounting Bracket(Indoor)	

Unlimited New View

Zhejiang Uniview Technologies Co., Ltd.

http://www.uniview.com

overseasbusiness@uniview.com; globalsupport@uniview.com

No. 369, Xietong Road, Xixing Sub-district, Binjiang District, Hangzhou City, 310051, Zhejiang Province, China

©2023-2026 Zhejiang Uniview Technologies Co., Ltd. All rights reserved.

*Product specifications and availability are subject to change without notice.

Despite our best efforts, technical or typographical errors may exist in this document. Uniview cannot be held responsible for any such errors and reserves the right to change the contents of this document without prior notice.