# 2 × 4 MP Dual-channel Non-Splicing Multiview Series IR Fixed Intelligent Network Camera

# IPC3224SS-ADF40K-I1

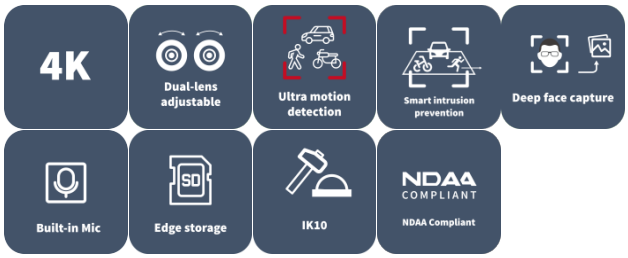


## Features

- High quality image with 2 × 4 MP resolution, 1/3.0" CMOS sensor
- Single IP with dual channels
- 4 MP (2688 × 1520)@25/20 fps; 4 MP (2560 × 1440)@25/20 fps; 3 MP (2304 × 1296)@30/25 fps; 1080P (1920 × 1080)@30/25 fps
- Ultra 265, H.265, H.264, MJPEG
- Both channels support intelligent perimeter protection, including cross line, intrusion, enter area, leave area detection
- Intelligent intrusion prevention system based on target classification significantly reduces false alarms caused by leaves, birds, and lights, accurately focusing on humans, vehicles, and non-motor vehicles
- Intelligent people flow counting and crowd density monitoring (only channel 1)
- 130 dB true WDR technology enables clear image in strong light scene
- Built-in dual-mic
- MicroSD, up to 1 TB
- DC 12 V, PoE (IEEE 802.3af) power supply
- IP67 protection and IK10 vandal resistant
- 3-axis

# Specifications

| Channel | Channel 1 | Channel 2 |
|---|---|---|
| Camera | | |
| Max Resolution | 4 MP | |
| Sensor | 1/3.0" CMOS | |
| Min. Illumination | Color: 0.002 Lux (F1.6, AGC ON), 0 Lux with IR on | |
| Day/Night | IR-cut filter with auto switch (ICR) | |
| Shutter | Auto/Manual, 1 ~ 1/100000s | |
| Adjustment Angle | Pan: 0° to 180°, Tilt: 0° to 66°, Rotate: 0° to 346° | |
| S/N | >52 dB | |
| WDR | 130 dB | |
| Lens | | |
| Focal Length | 4.0 mm | |
| Iris Type | Fixed | |
| Iris | F1.6 | |
| Field of View (H) | 81.39° | |
| Field of View (V) | 43.36° | |
| Field of View (D) | 86.91° | |
| Lens Type | Fixed | |
| DORI | | |
| DORI Distance (Lens) | 4 mm | |
| DORI Distance (Detect) | 90.0 m (295.3 ft.) | |
| DORI Distance (Observe) | 36.0 m (118.1 ft.) | |
| DORI Distance (Recognize) | 18.0 m (59.1 ft.) | |
| DORI Distance (Identify) | 9.0 m (29.5 ft.) | |
| Illuminator | | |
| Supplemental Light | IR | |
| Illumination Distance (IR) | 30 m (98.4 ft.) | |
| IR On/Off Control | Auto/Manual | |
| Wavelength | 850 nm | |
| Video | | |
| Video Compression | Ultra 265, H.265, H.264, MJPEG | |
| H.264 Code Profile | Baseline profile, Main profile, High profile | |
| Frame Rate | Main Stream: 4 MP (2688 × 1520) , max. 25 fps; 4 MP (2560 × 1440), max. 25 fps; 3 MP (2304 × 1296), max. 30 fps; 1080P (1920 × 1080), max. 30 fps; 720P (1280 × 720) max. 30 fps<br>Sub Stream: 720P (1280 × 720), max. 30 fps; D1 (720 × 576), max. 30 fps; 640 × 360, max. 30 fps; 2CIF (704 × 288), max. 30 fps; CIF (352 × 288), max. 30 fps;<br>Third Stream: D1 (720 × 576), max. 30 fps; 640 × 360, max. 30 fps; 2CIF (704 × 288), max. 30 fps; CIF (352 × 288), max. 30 fps; | |
| Video Bit Rate | 128 Kbps to 16 Mbps | |
| U-code | Support | |
| OSD | Up to 8 OSDs | |

| | |
|---|---|
| Privacy Mask | Up to 4 areas |
| ROI | Support |
| Video Stream | Triple streams |
| Image | |
| White Balance | Auto, Outdoor, Fine tune, Sodium lamp, Locked, Auto2 |
| Digital Noise Reduction | 2D/3D DNR |
| Smart IR | Support |
| Flip | Normal, Flip vertical, Flip horizontal, 180°, 90° Clockwise, 90° Anti-clockwise |
| Dewarping | N/A |
| HLC | Support |
| BLC | Support |
| Defog | Digital defog |
| Image Stabilization | N/A |
| Intelligent | |
| Smart Intrusion Prevention | Cross line detection, intrusion detection, enter area detection, leave area detection (support false alarm filtering and the classification of human, non-motor vehicle and vehicle) |
| Statistical Analysis | N/A |
| Events | |
| Basic Detection | Motion detection, Ultra motion detection, Tampering alarm, Audio detection, Object removed, Object Left Behind |
| General Function | Watermark, IP address filtering, Access policy, ARP protection, RTSP authentication, User authentication, HTTP authentication, Alarm input, Alarm output |
| Audio | |
| Audio Compression | G.711U, G.711A |
| Audio Bitrate | 64 Kbps |
| Two-way Audio | Support |
| Suppression | Support |
| Sampling Rate | 8 kHz |
| Storage | |
| Edge Storage | MicroSD, up to 1 TB |
| Network Storage | ANR, NAS (NFS) |
| Network | |
| Protocols | IPv4, IPv6, IGMP, ICMP, ARP, TCP, UDP, DHCP, PPPoE, RTP, RTSP, RTCP, RTMP, DNS, DDNS, NTP, FTP, UPnP, HTTP, HTTPS, SMTP, 802.1x, SNMP, QoS, SSL/TLS, SSH |
| Compatible Integration | API, SDK, ONVIF (Profile S, Profile G, Profile T, Profile M) |
| User/Host | Up to 32 users. 3 user levels: administrator, common user and operator |
| Security | Password Protection, Strong Password, HTTPS Encryption, Export Operation Logs, Basic and Digest Authentication for RTSP, Digest Authentication for HTTP, TLS 1.2, WSSE and Digest Authentication for ONVIF |
| Client | EZStation, APP |
| Web Browser | Plug-in required live view: IE 10+, Chrome 45+, Firefox 52+, Edge 79+, Plug-in free live view: Chrome 57+, Firefox 58+, Edge 16+ |
| Interface | |

| | |
|---|---|
| Audio I/O | 1 Input: impedance 35 kΩ, amplitude 2 V [p-p], 1 Output: impedance 600 Ω, amplitude 2 V [p-p] |
| Alarm I/O | 1/1 |
| Serial Port | N/A |
| Built-in Mic | Built-in dual-mic |
| Built-in Speaker | N/A |
| WIFI | N/A |
| Network | 1 × RJ45 10 M/100 M Base-TX Ethernet |
| Video Output | N/A |
| Certification | |
| EMC | CE-EMC (EN 55032, EN 61000-3-3, EN IEC 61000-3-2, EN 50130)<br>FCC (FCC 47 CFR part15 B) |
| Safety | CE-LVD (EN 62368-1)<br>UL/CUL (UL 62368-1, CAN/CSA C22.2 No. 62368-1) |
| Environment | CE-RoHS (2011/65/EU;(EU)2015/863); WEEE (2012/19/EU) |
| Protection | IP67 (IEC 60529)<br>IK10 (IEC 62262) |
| General | |
| Power | DC 12 V±25%, PoE (IEEE 802.3af) |
| Power Consumption | Max. 9.1 W |
| Power Interface | Ø5.5 mm coaxial power plug |
| Dimensions | 176 mm × 104 mm × 72 mm (6.9" × 4.1" × 2.8") (L × W × H) |
| Weight | 0.62 kg (1.37 lb.) |
| Material | Metal |
| Working Environment | -30 ℃ to 60 ℃ (-22 ℉ to 140 ℉), Humidity: ≤ 95% RH (non-condensing) |
| Storage Environment | -30 ℃ to 60 ℃ (-22 ℉ to 140 ℉), Humidity: ≤ 95% RH (non-condensing) |
| Surge Protection | 4 KV |
| Reset Button | Support |
| Web Client Language | 20 Languages: Traditional Chinese, English, Simplified Chinese, Polish, German, Russian, French, Korean, Dutch, Czech, Portuguese (Europe), Portuguese (Brazil), Japanese, Thai, Turkish, Spanish (Latin America), Spanish (Europe), Hungarian, Italian, Vietnamese |

# Dimensions

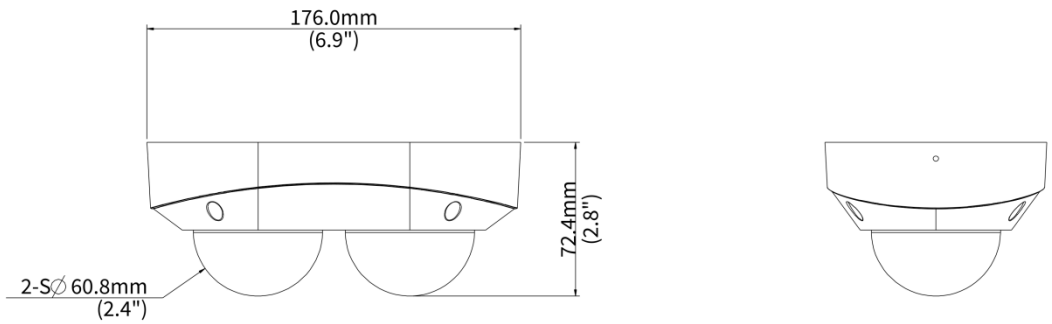


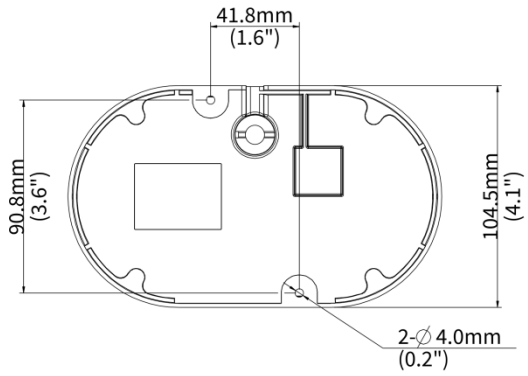


# Accessories

| TR-CM24-IN | TR-SE24-IN | TR-SE24-A-IN |
|---|---|---|
| Dome Pendent Mounting Bracket(Indoor) | Dome Pendent Mounting Pole 200mm | Dome Pendent Mounting Pole 500mm |
| | |  |
| **TR-JB08** | **TR-A01-IN** | **TR-UC08-C-V2** |
| Junction Box for 322x Dual-lens Dome | NPT 3/4'' Waterproof Cable Gland | Bullet&Dome Corner Mounting Bracket |
| | | |

| TR-WM03-E-IN-V2<br>Wall Mounting Bracket for Dual-Channel Dome Camera | TR-JB07/WM03-H-IN-V2<br>Wall Mounting Assembling Bracket For Dual-Channel Dome Camera | TR-UP06-C-IN-V2<br>Pole Mounting Bracket For Bullet Junction Box Only |
|---|---|---|
| | | |

# Unlimited New View

**Zhejiang Uniview Technologies Co., Ltd.**

http://www.uniview.com

overseasbusiness@uniview.com; globalsupport@uniview.com

No. 369, Xietong Road, Xixing Sub-district, Binjiang District, Hangzhou City, 310051, Zhejiang Province, China

©2025-2026 Zhejiang Uniview Technologies Co., Ltd. All rights reserved.

*Product specifications and availability are subject to change without notice.

Despite our best efforts, technical or typographical errors may exist in this document. Uniview cannot be held responsible for any such errors and reserves the right to change the contents of this document without prior notice.