2MP LightHunter HD IR Fixed Mini Bullet Analog Camera
UAC-B122-AF40M

Overview

UAC-B122-AF40M is a 2MP LightHunter HD IR fixed mini bullet analog camera with a high-performance 1/2.9-inch CMOS sensor and 3D noise reduction technology. It supports TVI/AHD/CVI/CVBS, which effectively enhances product adaptability and diversity of networking solutions. With SYV-75-3 or other coaxial cable types, the camera can achieve low-cost, long-distance, and anti-interference mega-pixel HD video transmission without time delay. It supports IR-cut filter with auto-switch (ICR) and provides color images at daytime and black/white images at night. The camera also supports audio input and synchronous transmission of audio and video.

Features

- High quality imaging with 2MP resolution
- TVI/AHD/CVI/CVBS
- Supports IR-cut filter with auto-switch (ICR)
- LightHunter monitoring with high-sensitivity sensor
- 3D noise reduction technology delivers clean and sharp images
- Supports 180° horizontal flip, 180° vertical flip
- OSD configuration menu, easy to operate
- IP67 waterproof and dustproof design, high reliability
- OSD configuration menu in 11 languages
- Built-in microphone for high quality audio transmission via coaxial cables
- Supports digital defog

Specifications

Model	UAC-B122-AF40M
Camera	
Max Resolution	2 MP
Sensor Size	1/2.9" CMOS
Min. Illumination	0.005 lux (F1.6, AGC ON) 0 lux (IR on)
Lens	
Focus	4.0 mm
Lens Mount	M12
Angle of View (H)	83.8°
Angle of View (V)	42.7°
Angle of View (D)	100.1°
Illuminator	
Illuminator Number	Two IR illuminators
Illumination Distance	40m
Lifetime	≥ 60000 hours
Video	
Resolution	1080P: 1920(H)×1080(V) 720P: 1280(H) ×720(V)
Frame Rate	TVI: 1080P@25fps, 1080P@30fps(default); 720P@25fps, 720P@30fps AHD: 1080P@25fps, 1080P@30fps; 720P@25fps, 720P@30fps CVI: 1080P@25fps, 1080P@30fps; 720P@25fps, 720P@30fps CVBS: PAL, NTSC
Shutter Time	PAL: 1/25s-1/50000s， NTSC: 1/30s-1/50000s
Image	
Exposure Mode	Four modes: Global (default), BLC, HLC, DWDR
Day/Night	Three modes: Auto (default), Day, Night
Digital Noise Reduction	2D/3D
White Balance	Two modes: Auto (default), Manual
WDR	DWDR
Smart IR	Support
Flip	Supports 180°horizontal flip, 180°vertical flip
Digital Defog	Support
Audio	
Built-in Mic	Support
Camera Audio	TVI: 1080P@25fps, 1080P@30fps CVI: 1080P@25fps, 1080P@30fps
Interface	
Power Interface	5.5 mm Power Interface
Video Output	BNC, supports TVI/AHD/CVI/CVBS

Operating Environment	
Temperature	-30°C to 60°C (-22°F to 140°F)
Humidity	≤ 95% RH (non-condensing)
Surge Protection	4 KV for power, 4 KV for video output interfaces
Ingress Protection	IP67
General	
Power	DC 12 V ± 25%
Power Consumption	MAX 3.2W
Mount	Corner Mount, Pole Mount
Dimensions	154mm*66mm*66mm (L*W*H)
Material	Metal
Weight	240g(0.53lb)

Dimensions

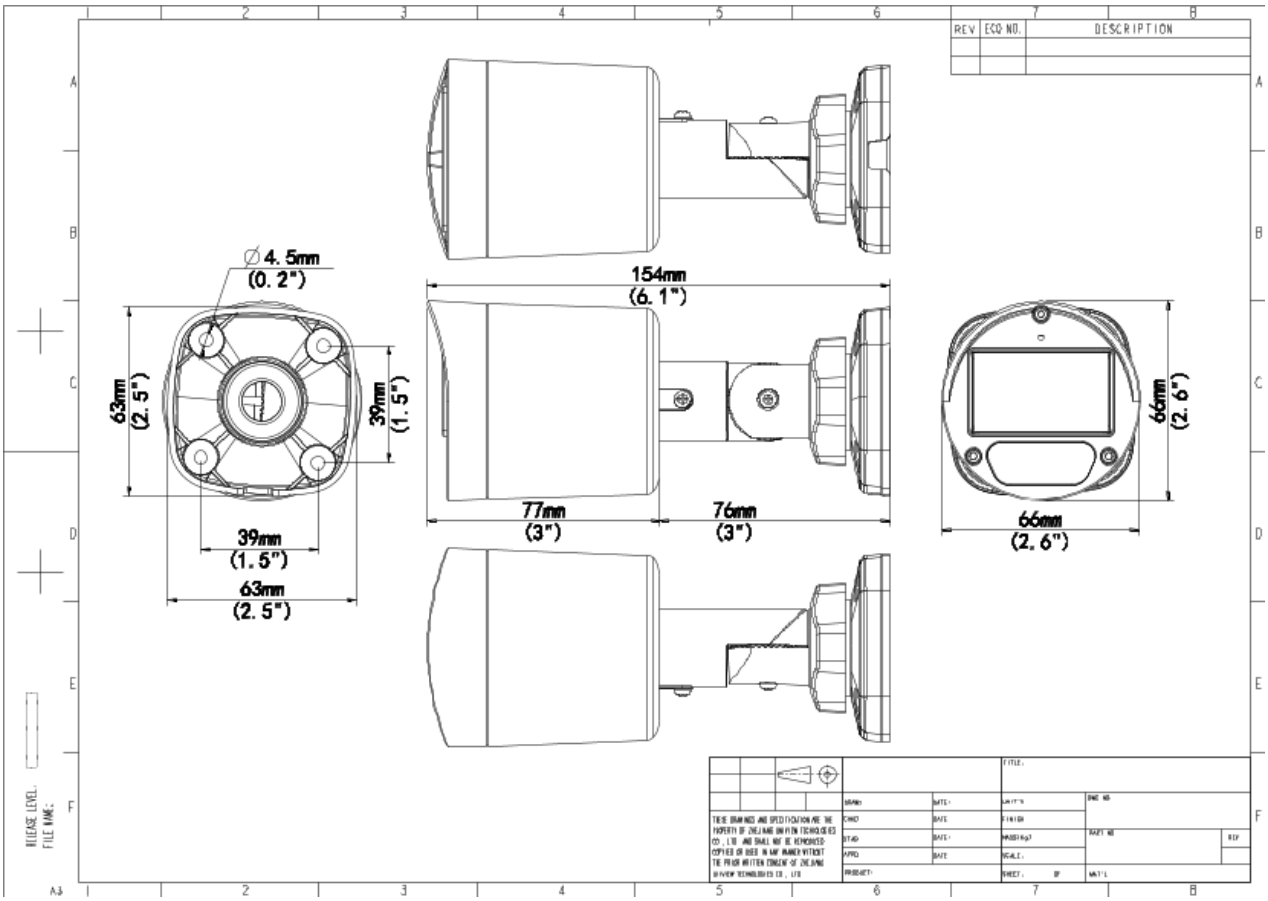

Accessories

TR-JB05-A-IN

Small Bullet Junction Box(Support wiring from behind,Square)

TR-UP06-B-IN

Bullet Pole Mounting Bracket

TR-UP06-C-IN

Pole Mounting Bracket for Bullet Junction Box Only

TR-UC08-C

Bullet&Dome Corner Mounting Bracket

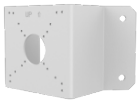

TR-A01-IN

NPT 3/4'' Waterproof Cable Gland

PWR-DC1201B-US

UNV DC12V/1A Wall Plug American Standard Power Adapter(Colorful Bag)

Zhejiang Uniview Technologies Co., Ltd.

http://www.uniview.com

overseasbusiness@uniview.com; globalsupport@uniview.com

No. 369, Xietong Road, Xixing Sub-district, Binjiang District, Hangzhou City, 310051, Zhejiang Province, China

©2023-2025 Zhejiang Uniview Technologies Co., Ltd. All rights reserved.

*Product specifications and availability are subject to change without notice.

*Despite our best efforts, technical or typographical errors may exist in this document.
Uniview cannot be held responsible for any such errors and reserves the right to change the contents of this document without prior notice.