5MP Fixed IR Dome Network Camera

# IPC325LB-SF28(40)-A

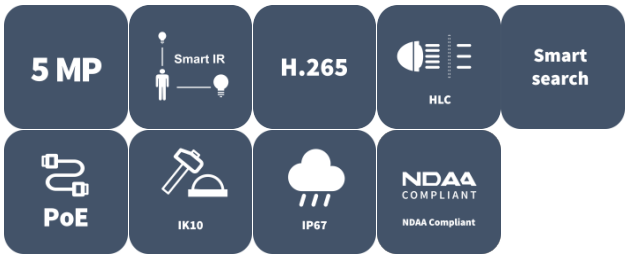


## Features

- High quality image with 5 MP, 1/3.0" CMOS sensor
- 5 MP (2592 × 1944)@20 fps; 4 MP (2560 × 1440)@20 fps; 3 MP (2304 × 1296)@20 fps; 1080P (1920 × 1080)@30/25 fps
- Ultra 265, H.265, H.264, MJPEG
- Smart IR, up to 30 m (98.4 ft.) IR distance
- Day/night functionality
- 2D/3D DNR (digital noise reduction)
- IP67 protection
- IK10 vandal resistant
- DC 12 V, PoE (IEEE 802.3af) power supply
- 2-axis

# Specifications

| Model | IPC325LB-SF28-A | IPC325LB-SF40-A |
|---|---|---|
| Camera | | |
| Max Resolution | 5 MP | |
| Sensor | 1/3.0" CMOS | |
| Min. Illumination | Color: 0.01 Lux (F2.1, AGC ON), 0 Lux with IR on | |
| Day/Night | IR-cut filter with auto switch (ICR) | |
| Shutter | Auto/Manual, 1 ~ 1/100000s | |
| Adjustment Angle | Pan: 3° to 360°, Tilt: 0° to 68° | |
| S/N | >52 dB | |
| WDR | DWDR | |
| Lens | | |
| Focal Length | 2.8 mm | 4.0 mm |
| Iris Type | Fixed | |
| Iris | F2.1 | |
| Field of View (H) | 97.0° | 79.0° |
| Field of View (V) | 52.2° | 42.3° |
| Field of View (D) | 107.5° | 85.1° |
| DORI | | |
| DORI Distance (Lens) | 2.8 mm | 4 mm |
| DORI Distance (Detect) | 63.0 m (206.7 ft.) | 90.0 m (295.3 ft.) |
| DORI Distance (Observe) | 25.2 m (82.7 ft.) | 36.0 m (118.1 ft.) |
| DORI Distance (Recognize) | 12.6 m (41.3 ft.) | 18.0 m (59.1 ft.) |
| DORI Distance (Identify) | 6.3 m (20.7 ft.) | 9.0 m (29.5 ft.) |
| Illuminator | | |
| Supplemental Light | IR | |
| Illumination Distance (IR) | 30 m (98.4 ft.) | |
| Wavelength | 850 nm | |
| IR On/Off Control | Auto/Manual | |
| Video | | |
| Video Compression | Ultra 265, H.265, H.264, MJPEG | |
| H.264 Code Profile | Baseline profile, Main profile, High profile | |
| Frame Rate | Main Stream: 5 MP (2592 × 1944), max. 20 fps; 4 MP (2560 × 1440), max. 20 fps; 3 MP (2304 × 1296), max. 20 fps; 1080P (1920 × 1080), max. 30 fps;<br>Sub Stream: D1 (720 × 576), max. 30 fps; 640 × 360, max. 30 fps; 2CIF (704 × 288), max. 30 fps; CIF (352 × 288), max. 30 fps | |
| Video Bit Rate | 128 Kbps to 6144 Kbps | |
| U-code | Support | |
| OSD | Up to 4 OSDs | |
| Privacy Mask | Up to 4 areas | |
| ROI | Support | |
| Video Stream | Dual streams | |

| | |
|---|---|
| Image | |
| White Balance | Auto, Outdoor, Fine tune, Sodium lamp, Locked, Auto2 |
| Digital Noise Reduction | 2D/3D DNR |
| Smart IR | Support |
| Flip | Normal, Flip vertical, Flip horizontal, 180° |
| Dewarping | N/A |
| HLC | Support |
| BLC | Support |
| Defog | Digital defog |
| Events | |
| Basic Detection | Motion detection, Tampering alarm |
| General Function | Watermark, IP address filtering, Access policy, ARP protection, RTSP authentication, User authentication, HTTP authentication |
| Network | |
| Protocols | IPv4, IGMP, ICMP, ARP, TCP, UDP, DHCP, RTP, RTSP, RTCP, RTMP, DNS, DDNS, NTP, UPnP, HTTP, HTTPS, SMTP, QoS, SSL/TLS, SNMP |
| Compatible Integration | ONVIF (Profile S, Profile T) , API, SDK |
| User/Host | Up to 32 users, 2 user levels: administrator and common user |
| Security | Password Protection, Strong Password, HTTPS Encryption, Export Operation Logs, Basic and Digest Authentication for RTSP, Digest Authentication for HTTP, WSSE and Digest Authentication for ONVIF |
| Client | EZStation, APP |
| Web Browser | Plug-in required live view: IE 10+, Chrome 45+, Firefox 52+, Edge 79+, Plug-in free live view: Chrome 57+, Firefox 58+, Edge 16+ |
| Interface | |
| Audio I/O | N/A |
| Alarm I/O | N/A |
| Serial Port | N/A |
| Built-in Mic | N/A |
| Built-in Speaker | N/A |
| WIFI | N/A |
| Network | 1 × RJ45 10 M/100 M Base-TX Ethernet |
| Video Output | N/A |
| Certification | |
| EMC | CE-EMC (EN 55032, EN 61000-3-3, EN IEC 61000-3-2, EN 50130-4)<br>FCC (FCC 47 CFR part15 B) |
| Safety | CE-LVD (EN 62368-1) |
| Environment | CE-RoHS (2011/65/EU ; (EU) 2015/863) ; WEEE (2012/19/EU) |
| Protection | IP67 (IEC 60529)<br>IK10 (IEC 62262) |
| General | |
| Power | DC 12 V±25%, PoE (IEEE 802.3af) |
| Power Consumption | Max. 5.0 W |

| | |
|---|---|
| Power Interface | Ø5.5 mm coaxial power plug |
| Dimensions | Ø109 mm × 81 mm (Ø4.3" × 3.2") (Ø × H) |
| Weight | 0.32 kg (0.71 lb.) |
| Material | Metal + Plastic |
| Working Environment | -30 ℃ to 60 ℃ (-22 ℉ to 140 ℉), Humidity: ≤ 95% RH (non-condensing) |
| Storage Environment | -30 ℃ to 60 ℃ (-22 ℉ to 140 ℉), Humidity: ≤ 95% RH (non-condensing) |
| Surge Protection | 4 KV |
| Reset Button | N/A |
| Web Client Language | 1 Language: English |

# Dimensions

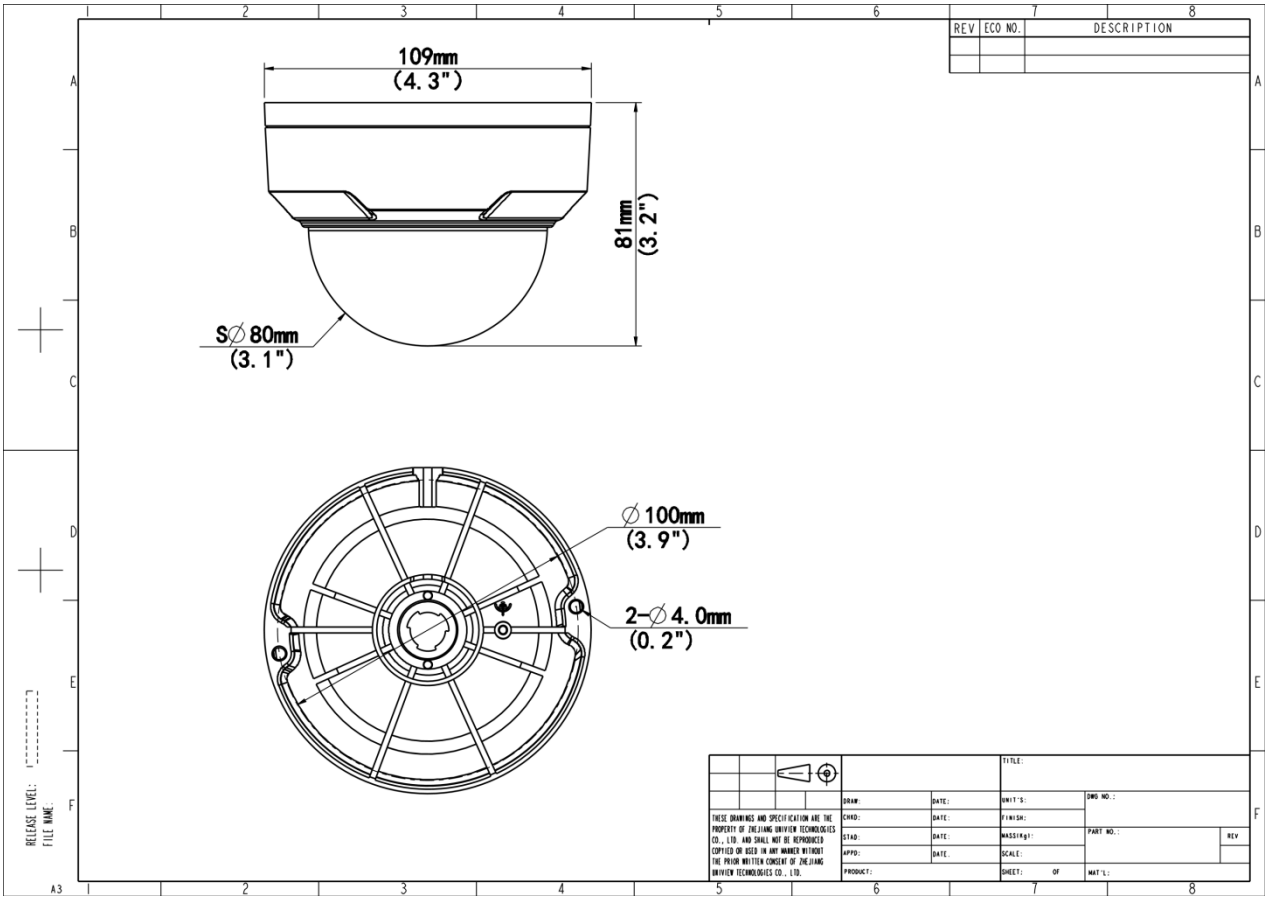

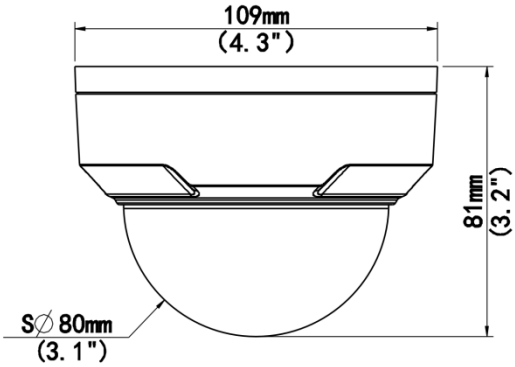


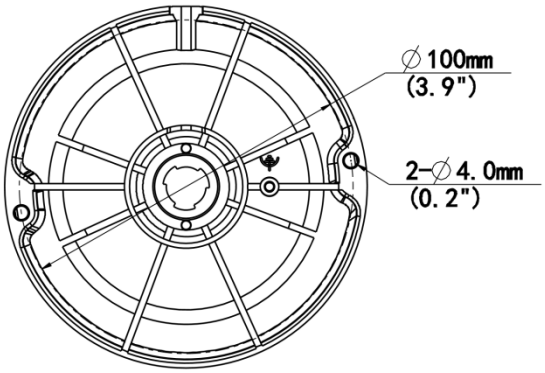


# Accessories

| TR-JB03-G-IN<br>Mini Dome Junction Box(Support Wiring From Behind) | HS-205S<br>Fixed Dome Sunshade Shell | TR-UM06-E-IN<br>Slant Mounting Bracket For Fixed Dome |
|---|---|---|
| | | |
| **TR-A01-IN**<br>NPT 3/4'' Waterproof Cable Gland | **TR-SE24-IN**<br>Dome Pendent Mounting Pole 200mm | **TR-SE24-A-IN**<br>Dome Pendent Mounting Pole 500mm |
| | |  |

| | | |
|---|---|---|
| **TR-CM24-IN**<br>Dome Pendent Mounting Bracket(Indoor) | **TR-JB07/WM03-G-IN-V2**<br>Wall Mounting Assembling Bracket For Dome&Mini Dome&Plastic Turret Camera | **TR-WM03-D-IN-V2**<br>Wall Mounting Bracket For Dome&Mini Dome&Plastic Turret Camera |
| | | |
| **TR-UC08-C-V2**<br>Bullet&Dome Corner Mounting Bracket | **TR-FM116**<br>In-ceiling Bracket for Fix-dome | **TR-UP06-C-IN-V2**<br>Pole Mounting Bracket For Bullet Junction Box Only |
| 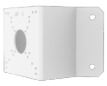 | | |
| **TR-WM07P-B**<br>Wall Mounting Plastic Bracket | | |
| | | |

# Unlimited New View

**Zhejiang Uniview Technologies Co., Ltd.**

http://www.uniview.com

overseasbusiness@uniview.com; globalsupport@uniview.com

No. 369, Xietong Road, Xixing Sub-district, Binjiang District, Hangzhou City, 310051, Zhejiang Province, China

©2023-2026 Zhejiang Uniview Technologies Co., Ltd. All rights reserved.

*Product specifications and availability are subject to change without notice.

Despite our best efforts, technical or typographical errors may exist in this document. Uniview cannot be held responsible for any such errors and reserves the right to change the contents of this document without prior notice.