## 3MP+3MP HD Indoor Dual lens PT Wi Fi Camera

# Uho-S3S-M33F36D-U

## Features

- Fixed camera and PT camera integration, dual channels with one IP, look at overall situation and consider details at the same time
- Ultra 265, H.265, H.264
- Support digital WDR (Wide Dynamic Range)
- Built-in Mic & Speaker, support two-way audio, offer better interaction
- Support sound and light warning, makes warning and alarming more noticeable
- Smart IR, up to 10m (33ft) IR and 10m (33ft) warm light distance, suitable for more scenes
- IR & warm light illumination to deal with different scenes and achieve full-color illumination
- Supports 512 GB Micro SD card
- Wi-Fi connection and easy installation

# Specifications

| Channel | Panorama | Detail |
|---|---|---|
| Camera | | |
| Sensor | 1/2.8" CMOS | |
| Min. Illumination | Colour: 0.01 lux (F2.0, AGC ON)<br>0 lux with IR | |
| Day/Night | IR-cut filter with auto switch (ICR) | |
| Shutter | Auto/Manual, 1 to 1/100000 s | |
| S/N | > 52 dB | |
| WDR | DWDR | |
| Lens | | |
| Digital Zoom | N/A | 4X |
| Iris | F2.0 | |
| Field of View (H) | 109.2° | 55.1° |
| Field of View (V) | 57.9° | 29.3° |
| Field of View (D) | 117.8° | 62.6° |
| Lens Type | Fixed | |
| DORI | | |
| DORI Distance (Lens) | 2.8 mm | 6.0 mm |
| DORI Distance (Detect) | 51.4 m (168.7 ft) | 110.2 m (361.6 ft) |
| DORI Distance (Observe) | 20.6 m (67.5 ft) | 44.1 m (144.6 ft) |
| DORI Distance (Recognize) | 10.3 m (33.7 ft) | 22.0 m (72.3 ft) |
| DORI Distance (Identify) | 5.1 m (16.9 ft) | 11.0 m (36.2 ft) |
| Illuminator | | |
| Illumination Distance (IR) | 10 m (32.8 ft.) | |
| Illumination Distance (Warm Light) | N/A | 10 m (32.8 ft.) |
| Light On/Off Control | Auto/Manual | |
| Wavelength | 850 nm | |
| Video | | |
| Video Compression | Ultra 265, H.265, H.264 | |
| Frame Rate-Main Stream | 3MP (2304*1296), Max 15fps; 2MP (1920*1080), Max 15fps; 720P (1280*720), Max 15fps; | |
| Frame Rate-Sub Stream | 640*360,Max 15fps; 2CIF(704*288), Max 15fps; CIF(352*288), Max 15fps; | |
| Video Bit Rate | 128 Kbps to 2048 Kbps | |
| ROI | Up to 8 areas | |
| OSD | Up to 4 OSDs | |
| Privacy Mask | Support (only NVR) | |
| Video Stream | Dual streams | |
| Image | | |
| White Balance | Auto, Outdoor, Fine tune, Sodium lamp, Locked, Auto2 | |
| Digital Noise Reduction | 2D/3D DNR | |
| Smart IR | Support | |

| | | |
|---|---|---|
| Flip | Normal, Flip vertical, Flip horizontal, 180° | |
| HLC | N/A | |
| BLC | N/A | |
| Defog | Digital defog | |
| Events | | |
| Basic Detection | Motion detection, Ultra motion detection (human/ vehicle/ pet), Loud sound detection, Crying detection, Tampering alarm | |
| General Function | IP address filtering, Access policy, ARP protection, RTSP authentication, User authentication, HTTP authentication | |
| Audio | | |
| Audio Compression | G.711U, G.711A | |
| Audio Bitrate | 64 Kbps | |
| Two-way Audio | Support | |
| Suppression | Support | |
| Sampling Rate | 8 kHz | |
| Storage | | |
| Edge Storage | MicroSD, up to 512 GB | |
| Network Storage | ANR | |
| Network | | |
| Wi-Fi | 2.4G Wi-Fi (IEEE802.11b/g/n/ax), built-in antenna | |
| Protocols | IPv4, TCP, UDP, DHCP, RTSP, DNS, DDNS, NTP, HTTP | |
| Compatible Integration | API | |
| Client | APP, EZStation | |
| Web Browser | Plug-in required live view: IE 10+, Chrome 45+, Firefox 52+, Edge 79+ | |
| Wi-Fi | | |
| Wireless Standards | IEEE802.11b/g/n/ax | |
| Frequency Range | 2.4 GHz to 2.4835 GHz | |
| Channel Bandwidth | 20/40 MHz Support | |
| Modulation Mode | 802.11b: CCK<br>802.11g/n: OFDM<br>802.11ax: OFDMA | |
| Wi-Fi Security | 64/128-bit WEP, WPA-PSK/WPA2-PSK | |
| Transmit Power | 802.11b: 17±1.5 dBm@11 Mbps802.11g: 16±1.5 dBm@54 Mbps802.11n: 16±1.5 dBm@MCS7802.11ax: 16±1.5 dBm@MCS9 | |
| Receive Sensitivity | 802.11b: -76 dBm@11 Mbps (Typical)802.11g: -65 dBm@54Mbps (Typical)802.11n: -61 dBm@MCS7, HT40 (Typical)802.11ax: -54 dBm@MCS9, HE40 (Typical) | |
| Transmission Rate | 802.11b: 11 Mbps802.11g: 54 Mbps802.11n: up to 150 Mbps802.11ax: up to 270 Mbps | |
| PTZ | | |
| Pan Range | N/A | 0° ~ 355° |
| Pan Speed | N/A | 17°/s ~ 50°/s<br>Preset speed: 50°/s |
| Tilt Range | 0° ~ 15° | -15° ~ 90° |
| Tilt Speed | N/A | 17°/s ~ 50°/s |

| | | |
|---|---|---|
| | | Preset speed: 50°/s |
| Number of Presets | 20 | |
| Interface | | |
| Built-in Mic | Support | |
| Built-in Speaker | Support | |
| WIFI | Support | |
| Network | 1 × RJ45 10 M/100 M Base-TX Ethernet | |
| Video Output | N/A | |
| Certification | | |
| EMC | CE EMC (EN 55032,EN 61000-3-3,EN IEC 61000-3-2,EN 50130)<br>FCC (FCC 47 CFR part15 B) | |
| RF | FCC ID (FCC CFR 47 part15 C)<br>CE RED (EN 301 489-1, EN 301 489-17, EN 300 328, EN 62311) | |
| Safety | CE LVD (EN 62368-1) | |
| Environment | CE-RoHS (2011/65/EU;(EU)2015/863); WEEE (2012/19/EU) | |
| General | | |
| Power | DC 5V/1.5A<br>USB type-C interface | |
| Dimensions | Φ83 x 127mm (Ø3.3” x 4.8”) | |
| Working Environment | -10 ℃ to 50 ℃ (14 ℉ to 122 ℉), Humidity: ≤ 95% RH (non-condensing) | |
| Storage Environment | -10 ℃ to 50 ℃ (14 ℉ to 122 ℉), Humidity: ≤ 95% RH (non-condensing) | |
| Surge Protection | N/A | |
| Reset Button | Support | |
| LED Indicator | 1, red/blue | |
| RTC | Support | |

# Dimensions

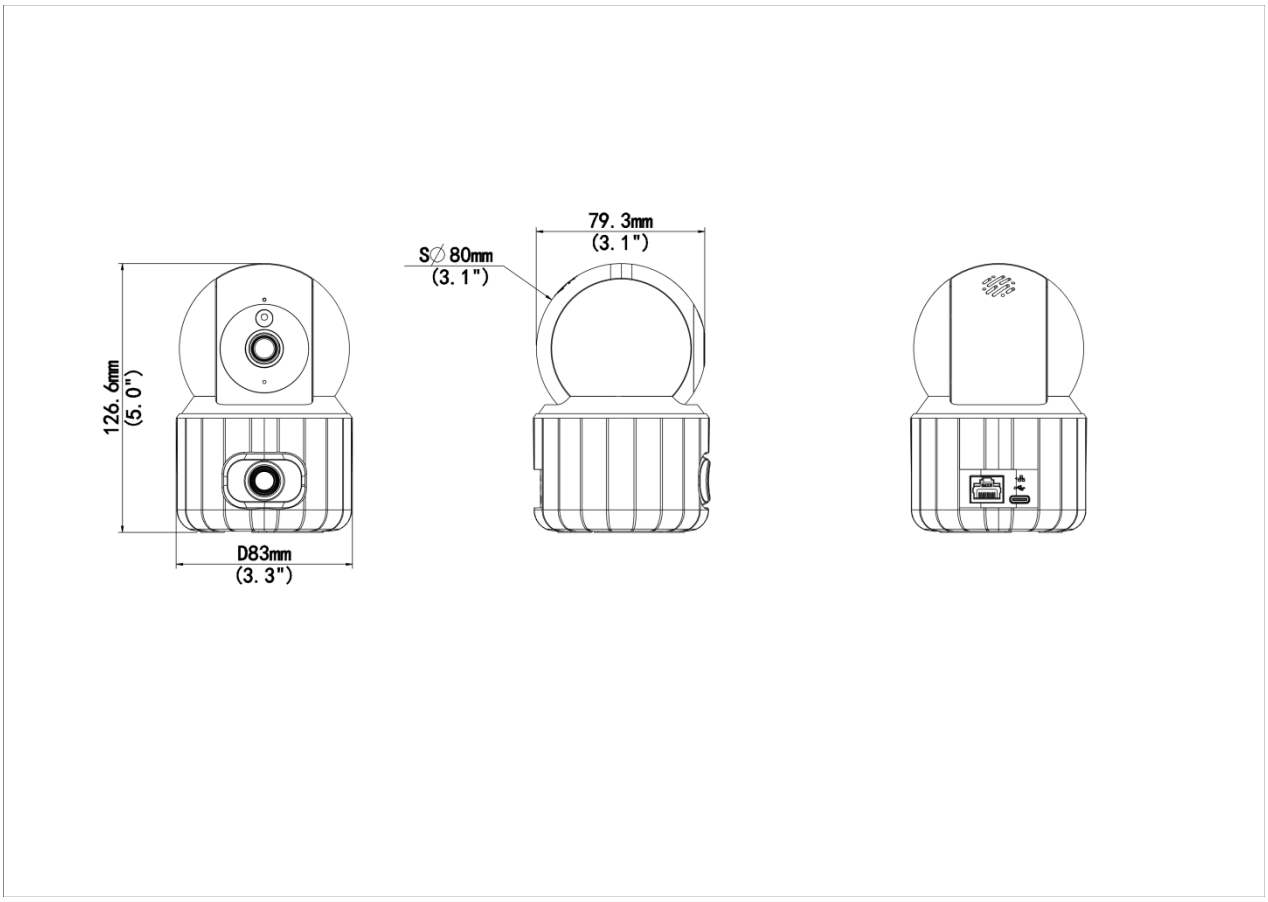


# Accessories

| TR-WM05-A<br>Indoor Camera PTZ Wall Mount Bracket | | |
|---|---|---|
| | | |

# Unlimited New View

**Zhejiang Uniview Technologies Co., Ltd.**

http://www.uniview.com

overseasbusiness@uniview.com; globalsupport@uniview.com

No. 369, Xietong Road, Xixing Sub-district, Binjiang District, Hangzhou City, 310051, Zhejiang Province, China

©2026 Zhejiang Uniview Technologies Co., Ltd. All rights reserved.

*Product specifications and availability are subject to change without notice.

Despite our best efforts, technical or typographical errors may exist in this document. Uniview cannot be held responsible for any such errors and reserves the right to change the contents of this document without prior notice.