4MP Tri Guard VF Dual light Turret Network Camera

IPC3634SE-ADZKMC-WP-I1

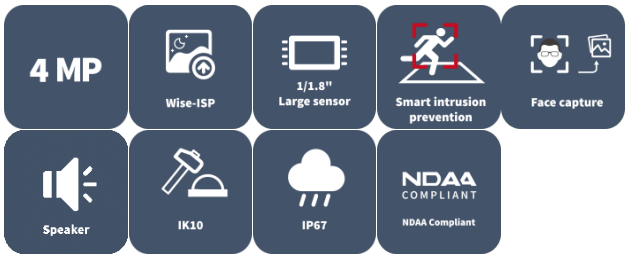

Features

- High quality image with 4 MP, 1/1.8" CMOS sensor
- Features an F1.2 large-aperture lens
- 4 MP (2688 × 1520)@30/25 (default) fps; 4 MP (2560 × 1440)@30/25 fps; 3 MP (2304 × 1296)@30/25 fps; 1080P (1920 × 1080)@30/25 fps
- Ultra 265, H.265, H.264, MJPEG
- ColorHunter with Wise-ISP technology ensures 24-hour full-color images
- Intelligent perimeter protection, including cross line, intrusion, enter area, leave area detection
- Based on target classification, smart intrusion prevention significantly reduces false alarm caused by leaves, birds and lights, accurately focusing on human, motor vehicle and non motor vehicle
- Intelligent people flow counting and crowd density monitoring
- Smart intrusion prevention with color retrieval
- ASM (auto scene match)
- 130 dB true WDR technology enables clear image in strong light scene
- Supports 9:16 corridor mode
- Supports red and blue warning light
- Alarm I/O: 1/1, audio I/O: 1/1, built-in mic and speaker
- Smart IR, up to 30 m (98.4 ft) IR distance
- White light, up to 30 m (98.4 ft) warm light distance
- MicroSD, up to 1 TB

- IK10 vandal resistant and IP67 protection

Specifications

Model	IPC3634SE-ADZKMC-WP-I1
Camera	
Max Resolution	4 MP
Sensor	1/1.8" CMOS
Min. Illumination	Color: 0.0005 Lux (F1.2, AGC ON)
Day/Night	IR-cut filter with auto switch (ICR)
Shutter	Auto/Manual, 1 to 1/100000 s
Adjustment Angle	Pan: 0° to 360°, Tilt: 0° to 78°, Rotate: 0° to 360°
S/N	> 56 dB
WDR	130 dB
Lens	
Focal Length	2.8 to 12 mm
Iris Type	Fixed
Iris	F1.2
Field of View (H)	113.5° to 54.6°
Field of View (V)	61.6° to 30.8°
Field of View (D)	131.1° to 62.8°
Lens Type	Motorized
DORI	
DORI Distance (Lens)	2.8 to 12 mm
DORI Distance (Detect)	43.4 m to 186.2 m (142.4 ft. to 610.9 ft.)
DORI Distance (Observe)	17.4 m to 74.5 m (57.1 ft. to 244.4 ft.)
DORI Distance (Recognize)	8.7 m to 37.2 m (28.5 ft. to 122.1 ft.)
DORI Distance (Identify)	4.3 m to 18.6 m (14.1 ft. to 61.0 ft.)
Illuminator	
Supplemental Light	Dual light
Illumination Distance (IR)	30 m (98.4 ft.)
Illumination Distance (Warm Light)	30 m (98.4 ft.)
IR On/Off Control	Auto/Manual
Wavelength	850 nm
Light On/Off Control	Auto/Manual
Video	
Video Compression	Ultra 265, H.265, H.264, MJPEG
H.264 Code Profile	Baseline profile, Main profile, High profile
Frame Rate-Main Stream	4 MP (2688 × 1520), max. 30 fps; 4 MP (2560 × 1440), max. 30 fps; 3 MP (2304 × 1296), max. 30 fps; 1080P (1920 × 1080), max. 30 fps; 720P (1280 × 720), max. 30 fps;
Frame Rate-Sub Stream	1080P (1920 × 1080), max. 30 fps; 720P (1280 × 720), max. 30 fps; D1 (720 × 576), max. 30 fps; 640 × 360, max. 30 fps; 2CIF (704 × 288), max. 30 fps; CIF (352 × 288), max. 30 fps
Frame Rate-Third Stream	D1 (720 × 576), max. 30 fps; 640 × 360, max. 30 fps; 2CIF (704 × 288), max. 30 fps; CIF (352 × 288),

	max. 30 fps;
Video Bit Rate	128 Kbps to 16 Mbps
U-code	Support
OSD	Up to 8 OSDs
Privacy Mask	Up to 4 areas
ROI	Support
Video Stream	Triple streams
Image	
White Balance	Auto, Outdoor, Fine tune, Sodium lamp, Locked, Auto2
Digital Noise Reduction	2D/3D DNR
Smart IR	Support
Auto Scene Match (ASM)	Support
Flip	Normal, Flip vertical, Flip horizontal, 180°, 90° Clockwise, 90° Anti-clockwise
Dewarping	N/A
HLC	Support
BLC	Support
Defog	Digital defog
Intelligent	
Smart Intrusion Prevention	Cross line detection, intrusion detection, enter area detection, leave area detection (support false alarm filtering and the classification of human, non-motor vehicle and vehicle)
Statistical Analysis	N/A
People Counting	Support people flow counting and crowd density detection
Attribute Collection	SIP with color retrieval
Events	
Basic Detection	Motion detection, Ultra motion detection, Tampering alarm, Audio detection, Object removed, Object Left Behind
General Function	Watermark, IP address filtering, Access policy, ARP protection, RTSP authentication, User authentication, HTTP authentication, Alarm input, Alarm output
Audio	
Audio Compression	G.711U, G.711A, AAC-LC
Audio Bitrate	G.711U/G.711A: 64 kbps, AAC-LC: 128 kbps
Two-way Audio	Support
Suppression	Support
Sampling Rate	G.711U/G.711A: 8 kHz, AAC-LC: 8 kHz, 16 kHz, 48 kHz
Storage	
Edge Storage	MicroSD, up to 1 TB
Network Storage	ANR, NAS (NFS)
Network	
Protocols	IPv4, IPv6, IGMP, ICMP, ARP, TCP, UDP, DHCP, PPPoE, RTP, RTSP, RTCP, RTMP, DNS, DDNS, NTP, UPnP, HTTP, HTTPS, SMTP, 802.1x, SNMP, QoS, SSL/TLS, SSH
Compatible Integration	ONVIF (Profile S, Profile G, Profile T, Profile M), API, SDK
User/Host	Up to 32 users. 3 user levels: administrator, common user and operator
Security	TLS 1.2, DTLS 1.2, Certificate Management, Brute Force Protection, Strong Password, OTP (One

	Time Programmable), Port Security, MAC Filtering, IP Filtering, Digital Watermarking, Configuration Encrypted Storage, Configuration Encrypted Export, HTTPS, Secure Boot, Firmware Encryption, Gateway ARP Binding, RTP/RTSP over HTTPS, Audit logs, Protected Shell, Session Timeout, Signed Firmware, 802.1X Authentication (EAP-TLS, EAP-MD5), WSSE and Digest Authentication for ONVIF, Password protection, Digest Authentication for HTTP, Digest SHA256 Authentication for HTTP, Digest SHA256 Authentication for ONVIF, Basic and Digest Authentication for RTSP
Client	EZStation, APP
Web Browser	Plug-in required live view: IE 10+, Chrome 45+, Firefox 52+, Edge 79+, Plug-in free live view: Chrome 57+, Firefox 58+, Edge 16+
Interface	
Audio I/O	1 Input: impedance 35 kΩ, amplitude 2 V [p-p], 1 Output: impedance 600 Ω, amplitude 2 V [p-p]
Alarm I/O	1/1
Serial Port	N/A
Built-in Mic	Built-in dual-mic
Built-in Speaker	Support
WIFI	N/A
Network	1 × RJ45 10 M/100 M Base-TX Ethernet
Video Output	N/A
Certification	
EMC	CE-EMC (EN 55032, EN 61000-3-3, EN IEC 61000-3-2, EN 50130-4) FCC (FCC 47 CFR part15 B)
Safety	CE-LVD (EN 62368-1) UL/CUL (UL 62368-1, CAN/CSA C22.2 No. 62368-1)
Environment	CE-RoHS (2011/65/EU ; (EU) 2015/863) ; WEEE (2012/19/EU)
Protection	IP67 (IEC 60529) IK10 (IEC 62262) NEMA 4X
General	
Power	DC 12 V±25%, PoE (IEEE 802.3af)
Power Consumption	Max. 5.0 W
Power Interface	Ø5.5 mm coaxial power plug
Dimensions	Ø129 mm × 110 mm (Ø5.1" × 4.3") (Ø × H)
Weight	0.85 kg (1.87 lb.)
Material	Metal
Working Environment	-40 ℃ to 60 ℃ (-40 ℉ to 140 ℉), Humidity: ≤ 95% RH (non-condensing)
Storage Environment	-40 ℃ to 60 ℃ (-40 ℉ to 140 ℉), Humidity: ≤ 95% RH (non-condensing)
Surge Protection	4 KV
Reset Button	Support
Web Client Language	20 Languages: Traditional Chinese, English, Simplified Chinese, Polish, German, Russian, French, Korean, Dutch, Czech, Portuguese (Europe), Portuguese (Brazil), Japanese, Thai, Turkish, Spanish (Latin America), Spanish (Europe), Hungarian, Italian, Vietnamese

Dimensions

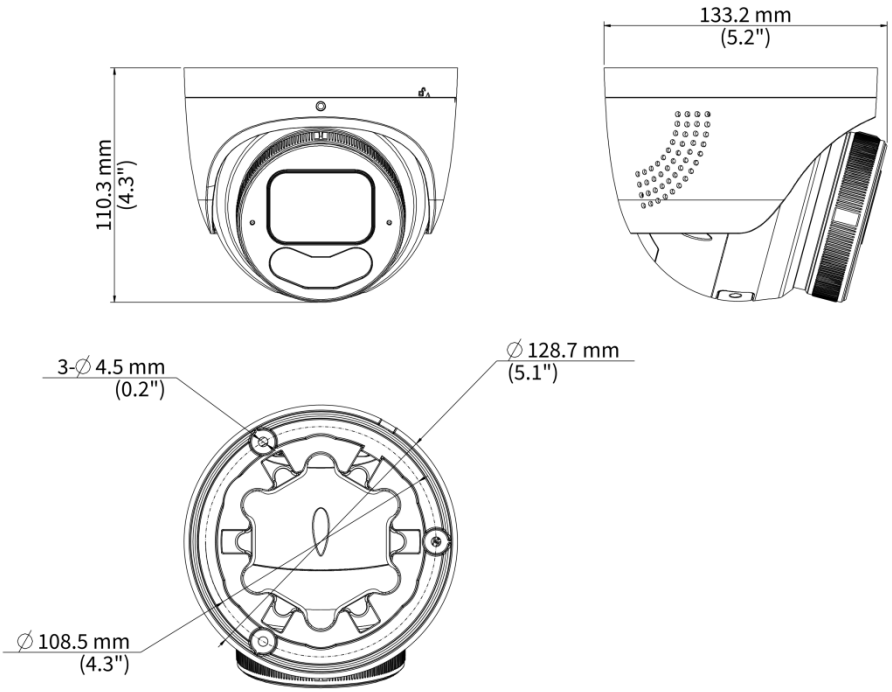

Accessories

TR-JB03-H-IN-V2	TR-JB07/WM03-F-IN-V2	TR-WM03-B-IN-V2
Turret Junction Box(Support Wiring From Behind)	Wall Mounting Assembling Bracket with Back Hole For 3 Inches Dome	3 Inches Dome Wall Mounting Assembling Bracket
TR-A01-IN	**TR-UC08-C-V2**	**TR-SE24-IN**
NPT 3/4'' Waterproof Cable Gland	Bullet&Dome Corner Mounting Bracket	Dome Pendent Mounting Pole 200mm

TR-CM24-IN Dome Pendent Mounting Bracket(Indoor)	TR-SE24-A-IN Dome Pendent Mounting Pole 500mm	TR-JB03-J-IN VF Turret Junction Box(Support Wiring From Behind)
TR-UP06-C-IN-V2 Pole Mounting Bracket For Bullet Junction Box Only		

Unlimited New View

Zhejiang Uniview Technologies Co., Ltd.

http://www.uniview.com

overseasbusiness@uniview.com; globalsupport@uniview.com

No. 369, Xietong Road, Xixing Sub-district, Binjiang District, Hangzhou City, 310051, Zhejiang Province, China

©2025-2026 Zhejiang Uniview Technologies Co., Ltd. All rights reserved.

*Product specifications and availability are subject to change without notice.

Despite our best efforts, technical or typographical errors may exist in this document. Uniview cannot be held responsible for any such errors and reserves the right to change the contents of this document without prior notice.