5MP LightHunter Intelligent HDMI Fixed IR Dome Network Camera

IPC3515SS-ADF28K-I1-HI

Features

- High quality image with 5 MP, 1/2.7" CMOS sensor
- 5 MP (2880 × 1620)@30/25 (default) fps; 4 MP (2560 × 1440)@30/25 fps; 3 MP (2304 × 1296)@30/25 fps; 1080P (1920 × 1080)@30/25 fps
- HDMI: 50 Hz: 25 fps (1080P); 60 Hz: 30 fps (1080P)
- Ultra 265, H.265, H.264, MJPEG
- Intelligent perimeter protection, including cross line, intrusion, enter area, leave area detection
- Intelligent intrusion prevention system based on target classification significantly reduces false alarms caused by leaves, birds, and lights, accurately focusing on humans, vehicles, and non-motor vehicles
- Intelligent people flow counting and crowd density monitoring
- Smart intrusion prevention with color retrieval
- ASM (auto scene match)
- LightHunter technology ensures ultra-high image quality in low illumination environment
- 130 dB true WDR technology enables clear image in strong light scene
- Supports 9:16 corridor mode
- Alarm I/O: 1/1, audio I/O: 1/1, 1 × HDMI
- Smart IR, up to 40 m (131.2 ft) IR distance
- MicroSD, up to 1 TB
- IK10 vandal resistant

Specifications

Model	IPC3515SS-ADF28K-I1-HI
Camera	
Max Resolution	5 MP
Sensor	1/2.7" CMOS
Min. Illumination	Color: 0.002 Lux (F1.6, AGC ON), 0 Lux with IR on
Day/Night	IR-cut filter with auto switch (ICR)
Shutter	Auto/Manual, 1 to 1/100000 s
Adjustment Angle	Pan: 3° to 360°, Tilt: 0° to 68°, Rotate: 3° to 360°
S/N	>56 dB
WDR	130 dB
Lens	
Focal Length	2.8 mm
Iris Type	Fixed
Iris	F1.6
Field of View (H)	110.0°
Field of View (V)	58.7°
Field of View (D)	130.0°
Lens Type	Fixed
DORI	
DORI Distance (Lens)	2.8 mm
DORI Distance (Detect)	63.0 m (206.7 ft.)
DORI Distance (Observe)	25.2 m (82.7 ft.)
DORI Distance (Recognize)	12.6 m (41.3 ft.)
DORI Distance (Identify)	6.3 m (20.7 ft.)
Illuminator	
Supplemental Light	IR
Illumination Distance (IR)	40 m (131.2 ft.)
IR On/Off Control	Auto/Manual
Wavelength	850 nm
Video	
Video Compression	Ultra 265, H.265, H.264, MJPEG
H.264 Code Profile	Baseline profile, Main profile, High profile
Frame Rate	Main Stream: 5 MP (2880 × 1620), max. 30 fps; 4 MP (2560 × 1440), max. 30 fps; 3 MP (2304 × 1296), max. 30 fps; 1080P (1920 × 1080), max. 30 fps; Sub Stream: 1080P (1920 × 1080), max. 30 fps; 720P (1280 × 720), max. 30 fps; D1 (720 × 576), max. 30 fps; 640 × 360, max. 30 fps; 2CIF (704 × 288), max. 30 fps; CIF (352 × 288), max. 30 fps; Third Stream: D1 (720 × 576), max. 30 fps; 640 × 360, max. 30 fps; 2CIF (704 × 288), max. 30 fps; CIF (352 × 288), max. 30 fps; HDMI: 50HZ: 25 fps (1080P) ; 60HZ: 30 fps (1080P);
Video Bit Rate	128 Kbps to 16 Mbps
U-code	Support

OSD	Up to 8 OSDs
Privacy Mask	Up to 4 areas
ROI	Support
Video Stream	Triple streams
Image	
White Balance	Auto, Outdoor, Fine tune, Sodium lamp, Locked, Auto2
Smart IR	Support
Auto Scene Match (ASM)	Support (only WDR)
Digital Noise Reduction	2D/3D DNR
Flip	Normal, Flip vertical, Flip horizontal, 180°, 90° Clockwise, 90° Anti-clockwise
Dewarping	N/A
HLC	Support
BLC	Support
Defog	Digital defog
Intelligent	
Smart Intrusion Prevention	Cross line detection, intrusion detection, enter area detection, leave area detection (support false alarm filtering and the classification of human, non-motor vehicle and vehicle)
Statistical Analysis	N/A
People Counting	Support people flow counting and crowd density detection
Attribute Collection	SIP with color retrieval
Events	
Basic Detection	Motion detection, Ultra motion detection, Tampering alarm, Audio detection, Object removed, Object Left Behind
General Function	Watermark, IP address filtering, Access policy, ARP protection, RTSP authentication, User authentication, HTTP authentication, Alarm input, Alarm output
Audio	
Audio Compression	G.711U, G.711A, AAC-LC
Audio Bitrate	G.711U/G.711A: 64 kbps, AAC-LC: 128 kbps
Two-way Audio	Support
Suppression	Support
Sampling Rate	G.711U/G.711A: 8 kHz, AAC-LC: 8 kHz, 16 kHz, 48 kHz
Storage	
Edge Storage	MicroSD, up to 1 TB
Network Storage	ANR, NAS (NFS)
Network	
Protocols	IPv4, IPv6, IGMP, ICMP, ARP, TCP, UDP, DHCP, PPPoE, RTP, RTSP, RTCP, RTMP, DNS, DDNS, NTP, FTP, UPnP, HTTP, HTTPS, SMTP, 802.1x, SNMP, QoS, SSL/TLS, SSH
Compatible Integration	API, SDK, ONVIF (Profile S, Profile G, Profile T, Profile M)
User/Host	Up to 32 users. 3 user levels: administrator, common user and operator
Security	Password Protection, Strong Password, HTTPS Encryption, Export Operation Logs, Basic and Digest Authentication for RTSP, Digest Authentication for HTTP, TLS 1.2, WSSE and Digest Authentication for ONVIF
Client	EZStation, APP

Web Browser	Plug-in required live view: IE 10+, Chrome 45+, Firefox 52+, Edge 79+, Plug-in free live view: Chrome 57+, Firefox 58+, Edge 16+
Interface	
Audio I/O	1 Input: impedance 35 kΩ, amplitude 2 V [p-p], 1 Output: impedance 600 Ω, amplitude 2 V [p-p]
Alarm I/O	1/1
Serial Port	N/A
Built-in Mic	Support
Built-in Speaker	N/A
WIFI	N/A
Network	1 × RJ45 10 M/100 M Base-TX Ethernet
Video Output	1 HDMI
Certification	
EMC	CE-EMC (EN 55032, EN 61000-3-3, EN IEC 61000-3-2, EN 50130) FCC (FCC 47 CFR part15 B)
Safety	CE-LVD (EN 62368-1) CB (IEC 62368-1) UL/CUL (UL 62368-1, CAN/CSA C22.2 No. 62368-1)
Environment	CE-RoHS (2011/65/EU;(EU)2015/863); WEEE (2012/19/EU)
Protection	IP54 IK10 (IEC 62262)
General	
Power	DC 12 V±25%, PoE (IEEE 802.3af)
Power Consumption	Max. 8.0 W
Power Interface	Ø5.5 mm coaxial power plug
Dimensions	Ø128.2 mm × 100.0 mm (Ø5.0" × 3.9") (Ø × H)
Weight	0.67 kg (1.47 lb.)
Material	Metal
Working Environment	-30 ℃ to 60 ℃ (-22 ℉ to 140 ℉), Humidity: ≤ 95% RH (non-condensing)
Storage Environment	-30 ℃ to 60 ℃ (-22 ℉ to 140 ℉), Humidity: ≤ 95% RH (non-condensing)
Surge Protection	4 KV
Reset Button	Support
Web Client Language	20 Languages: Traditional Chinese, English, Simplified Chinese, Polish, German, Russian, French, Korean, Dutch, Czech, Portuguese (Europe), Portuguese (Brazil), Japanese, Thai, Turkish, Spanish (Latin America), Spanish (Europe), Hungarian, Italian, Vietnamese

Dimensions

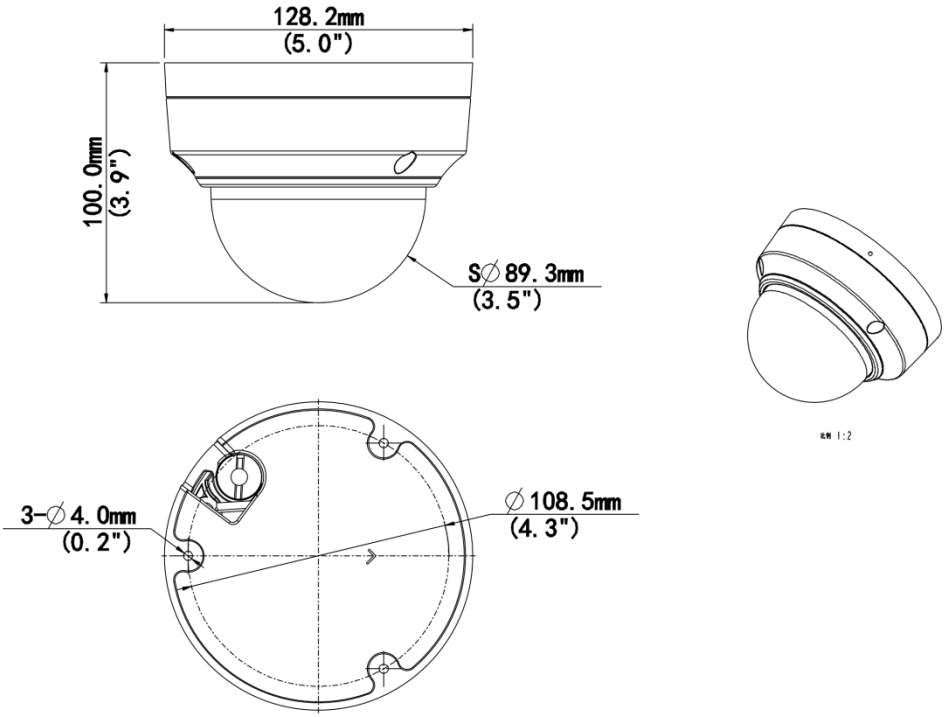

Accessories

TR-JB03-H-IN-V2 Turret Junction Box(Support Wiring From Behind)	TR-A01-IN NPT 3/4'' Waterproof Cable Gland	TR-SE24-IN Dome Pendent Mounting Pole 200mm
TR-SE24-A-IN Dome Pendent Mounting Pole 500mm	**TR-CM24-IN** Dome Pendent Mounting Bracket(Indoor)	**TR-UC08-C-V2** Bullet&Dome Corner Mounting Bracket

TR-JB07/WM03-F-IN-V2 Wall Mounting Assembling Bracket with Back Hole For 3 Inches Dome	**TR-WM03-B-IN-V2** 3 Inches Dome Wall Mounting Assembling Bracket	**HS-207S** VF Dome Sunshade Shell
TR-UP06-C-IN-V2 Pole Mounting Bracket For Bullet Junction Box Only		

Unlimited New View

Zhejiang Uniview Technologies Co., Ltd.

http://www.uniview.com

overseasbusiness@uniview.com; globalsupport@uniview.com

No. 369, Xietong Road, Xixing Sub-district, Binjiang District, Hangzhou City, 310051, Zhejiang Province, China

©2024-2026 Zhejiang Uniview Technologies Co., Ltd. All rights reserved.

*Product specifications and availability are subject to change without notice.

Despite our best efforts, technical or typographical errors may exist in this document. Uniview cannot be held responsible for any such errors and reserves the right to change the contents of this document without prior notice.