8MP LightHunter Intelligent Fixed IR Turret Network Camera

IPC3618SS-ADF28(40)K-I1

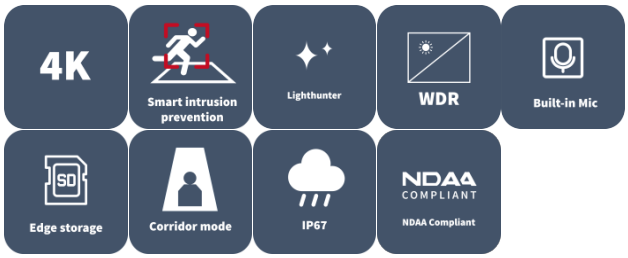

Features

- High quality image with 8 MP, 1/2.8" CMOS sensor
- 8 MP (3840 × 2160)@30/25 (default) fps; 5 MP (3072 × 1728)@30/25 fps; 4 MP (2560 × 1440)@30/25 fps; 1080P (1920 × 1080)@30/25 fps
- Ultra 265, H.265, H.264, MJPEG
- Intelligent perimeter protection, including cross line, intrusion, enter area, leave area detection
- Based on target classification, smart intrusion prevention significantly reduces false alarm caused by leaves, birds and lights, accurately focusing on human, motor vehicle and non-motor vehicle
- Intelligent people flow counting and crowd density monitoring
- Smart intrusion prevention with color retrieval
- ASM (auto scene match)
- LightHunter technology ensures ultra-high image quality in low illumination environment
- 130 dB true WDR technology ensures clear image in strong backlight scene
- Supports 9:16 corridor mode
- Built-in mic
- Smart IR, up to 40 m (131.2 ft) IR distance
- MicroSD, up to 1 TB
- IP67 protection

Specifications

Model	IPC3618SS-ADF28K-I1	IPC3618SS-ADF40K-I1
Camera		
Max Resolution	8 MP	
Sensor	1/2.8" CMOS	
Min. Illumination	Color: 0.002 Lux (F1.6, AGC ON), 0 Lux with IR on	
Day/Night	IR-cut filter with auto switch (ICR)	
Shutter	Auto/Manual, 1 ~ 1/100000s	
Adjustment Angle	Pan: 0° to 352°, Tilt: 0° to 70°, Rotate: 0° to 350°	
S/N	>56 dB	
WDR	130 dB	
Lens		
Focal Length	2.8 mm	4.0 mm
Iris Type	Fixed	
Iris	F1.6	
Field of View (H)	97.49°	88.35°
Field of View (V)	52.31°	49.61°
Field of View (D)	102.29°	94.19°
Lens Type	Fixed	
DORI		
DORI Distance (Lens)	2.8 mm	4 mm
DORI Distance (Detect)	86.9 m (285.1 ft.)	124.1 m (407.2 ft.)
DORI Distance (Observe)	34.8 m (114.2 ft.)	49.7 m (163.1 ft.)
DORI Distance (Recognize)	17.4 m (57.1 ft.)	24.8 m (81.4 ft.)
DORI Distance (Identify)	8.7 m (28.5 ft.)	12.4 m (40.7 ft.)
Illuminator		
Illumination Distance (IR)	40 m (131.2 ft.)	
IR On/Off Control	Auto/Manual	
Wavelength	850 nm	
Video		
Video Compression	Ultra 265, H.265, H.264, MJPEG	
H.264 Code Profile	Baseline profile, Main profile, High profile	
Frame Rate	Main Stream: 8 MP (3840 × 2160), max. 30 fps; 5 MP (3072 × 1728), max. 30 fps; 4 MP (2560 × 1440), max. 30 fps; 1080P (1920 × 1080), max. 30 fps; Sub Stream: 720P (1280 × 720), max. 30 fps; D1 (720 × 576), max. 30 fps; 640 × 360, max. 30 fps; 2CIF (704 × 288), max. 30 fps; CIF (352 × 288), max. 30 fps; Third Stream: D1 (720 × 576), max. 30 fps; 640 × 360, max. 30 fps; 2CIF (704 × 288), max. 30 fps; CIF (352 × 288), max. 30 fps;	
Video Bit Rate	128 Kbps to 16 Mbps	
U-code	Support	
OSD	Up to 8 OSDs	
Privacy Mask	Up to 4 areas	

ROI	Support
Video Stream	Triple streams
Image	
Auto Scene Match (ASM)	Support (only WDR)
White Balance	Auto, Outdoor, Fine tune, Sodium lamp, Locked, Auto2
Smart IR	Support
Digital Noise Reduction	2D/3D DNR
Flip	Normal, Flip vertical, Flip horizontal, 180°, 90° Clockwise, 90° Anti-clockwise
Dewarping	N/A
HLC	Support
BLC	Support
Defog	Digital defog
Intelligent	
Smart Intrusion Prevention	Cross line detection, intrusion detection, enter area detection, leave area detection (support false alarm filtering and the classification of human, non-motor vehicle and vehicle)
Statistical Analysis	N/A
People Counting	Support people flow counting and crowd density detection
Attribute Collection	SIP with color retrieval
Events	
Basic Detection	Motion detection, Ultra motion detection, Tampering alarm, Audio detection, Object removed, Object Left Behind
General Function	Watermark, IP address filtering, Access policy, ARP protection, RTSP authentication, User authentication, HTTP authentication
Audio	
Audio Compression	G.711U, G.711A, AAC-LC
Audio Bitrate	G.711U/G.711A: 64 kbps, AAC-LC: 128 kbps
Two-way Audio	N/A
Suppression	Support
Sampling Rate	G.711U/G.711A: 8 kHz, AAC-LC: 8 kHz, 16 kHz, 48 kHz
Storage	
Edge Storage	MicroSD, up to 1 TB
Network Storage	ANR, NAS (NFS)
Network	
Protocols	IPv4, IPv6, IGMP, ICMP, ARP, TCP, UDP, DHCP, PPPoE, RTP, RTSP, RTCP, RTMP, DNS, DDNS, NTP, FTP, UPnP, HTTP, HTTPS, SMTP, 802.1x, SNMP, QoS, SSL/TLS, SSH
Compatible Integration	API, SDK, ONVIF (Profile S, Profile G, Profile T, Profile M)
User/Host	Up to 32 users. 3 user levels: administrator, common user and operator
Security	Password Protection, Strong Password, HTTPS Encryption, Export Operation Logs, Basic and Digest Authentication for RTSP, Digest Authentication for HTTP, TLS 1.2, WSSE and Digest Authentication for ONVIF
Client	EZStation, APP
Web Browser	Plug-in required live view: IE 10+, Chrome 45+, Firefox 52+, Edge 79+, Plug-in free live view: Chrome 57+, Firefox 58+, Edge 16+

Interface	
Audio I/O	N/A
Alarm I/O	N/A
Serial Port	N/A
Built-in Mic	Support
Built-in Speaker	N/A
WIFI	N/A
Network	1 × RJ45 10 M/100 M Base-TX Ethernet
Video Output	N/A
Certification	
EMC	CE-EMC (EN 55032, EN 61000-3-3, EN IEC 61000-3-2, EN 50130) FCC (FCC 47 CFR part15 B)
Safety	CE-LVD (EN 62368-1) UL/CUL (UL 62368-1, CAN/CSA C22.2 No. 62368-1)
Environment	CE-RoHS (2011/65/EU;(EU)2015/863); WEEE (2012/19/EU)
Protection	IP67 (IEC 60529)
General	
Power	DC 12 V±25%, PoE (IEEE 802.3af)
Power Consumption	Max. 7.0 W
Power Interface	Ø5.5 mm coaxial power plug
Dimensions	Ø129 mm × 110 mm (Ø5.1" × 4.3") (Ø × H)
Weight	0.42 kg (0.93 lb.)
Material	Metal + Plastic
Working Environment	-30 ℃ to 60 ℃ (-22 ℉ to 140 ℉), Humidity: ≤ 95% RH (non-condensing)
Storage Environment	-30 ℃ to 60 ℃ (-22 ℉ to 140 ℉), Humidity: ≤ 95% RH (non-condensing)
Surge Protection	4 KV
Reset Button	N/A
Web Client Language	20 Languages: Traditional Chinese, English, Simplified Chinese, Polish, German, Russian, French, Korean, Dutch, Czech, Portuguese (Europe), Portuguese (Brazil), Japanese, Thai, Turkish, Spanish (Latin America), Spanish (Europe), Hungarian, Italian, Vietnamese

Dimensions

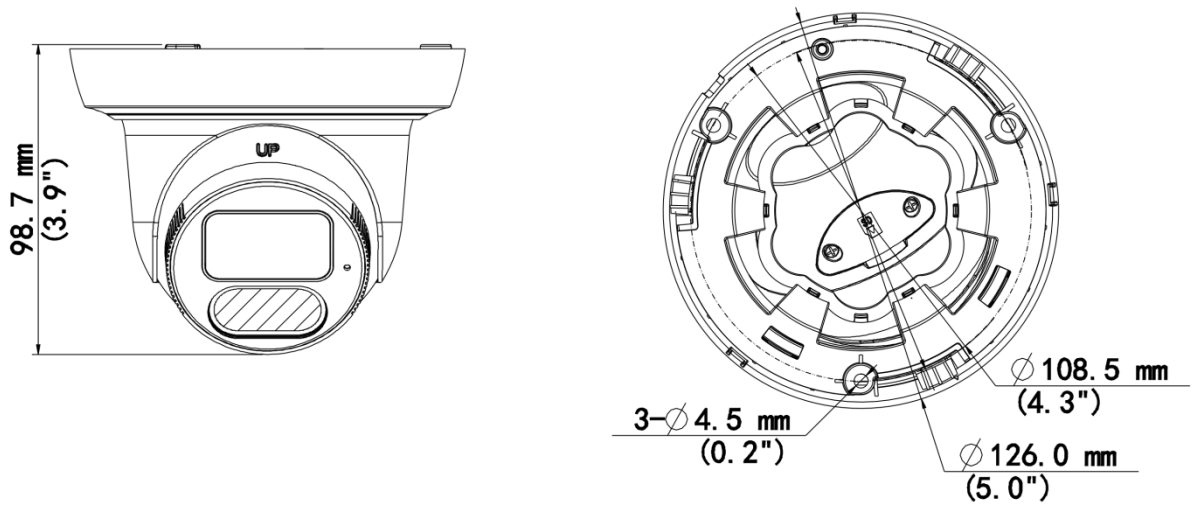

Accessories

TR-JB03-H-IN-V2	TR-JB07/WM03-F-IN-V2	TR-WM03-B-IN-V2
Turret Junction Box(Support Wiring From Behind)	Wall Mounting Assembling Bracket with Back Hole For 3 Inches Dome	3 Inches Dome Wall Mounting Assembling Bracket
TR-A01-IN	**TR-UC08-C-V2**	**TR-UP06-C-IN-V2**
NPT 3/4'' Waterproof Cable Gland	Bullet&Dome Corner Mounting Bracket	Pole Mounting Bracket For Bullet Junction Box Only
	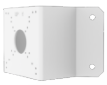	

TR-SE24-IN Dome Pendent Mounting Pole 200mm	TR-CM24-IN Dome Pendent Mounting Bracket(Indoor)	TR-SE24-A-IN Dome Pendent Mounting Pole 500mm

Unlimited New View

Zhejiang Uniview Technologies Co., Ltd.

http://www.uniview.com

overseasbusiness@uniview.com; globalsupport@uniview.com

No. 369, Xietong Road, Xixing Sub-district, Binjiang District, Hangzhou City, 310051, Zhejiang Province, China

©2024-2026 Zhejiang Uniview Technologies Co., Ltd. All rights reserved.

*Product specifications and availability are subject to change without notice.

Despite our best efforts, technical or typographical errors may exist in this document. Uniview cannot be held responsible for any such errors and reserves the right to change the contents of this document without prior notice.