8MP HD Intelligent ColorHunter Fixed Eyeball Network Camera

IPC3618SE-ADF28(40)KM-WL-I0

Features

- High quality image with 8 MP, 1/2.8" CMOS sensor
- 8 MP (3840 × 2160)@20 fps; 5 MP (3072 × 1728)@30/25 fps; 4 MP (2560 × 1440)@30/25 fps; 1080P (1920 × 1080)@30/25 fps
- Ultra 265, H.265, H.264, MJPEG
- Smart intrusion prevention, supports false alarm filtering, including cross line, intrusion, enter area, leave area detection
- Based on target classification, smart intrusion prevention significantly reduces false alarm caused by leaves, birds and lights, accurately focusing on human, motor vehicle and non-motor vehicle
- automatic selection of best snapshots, supports face detection masked area
- People counting, supports people flow counting and crowd density monitoring, suitable for different statistical scenarios
- 120 dB true WDR technology enables clear image in strong light scene
- Supports 9:16 corridor mode
- Built-in mic
- Smart illuminator, up to 30 m (98.4 ft) white light range
- MicroSD, up to 1 TB
- IP67 protection

Specifications

Model	IPC3618SE-ADF28KM-WL-I0	IPC3618SE-ADF40KM-WL-I0
Camera		
Max Resolution	8 MP	
Sensor	1/2.8" CMOS	
Min. Illumination	Color: 0.0005 Lux (F1.0, AGC ON)	
Shutter	Auto/Manual, 1 to 1/100000 s	
Adjustment Angle	Pan: 3° to 360°, Tilt: 0° to 80°, Rotate: 3° to 360°	
S/N	>56 dB	
WDR	120 dB	
Lens		
Focal Length	2.8 mm	4.0 mm
Iris Type	Fixed	
Iris	F1.0	
Field of View (H)	106.7°	87.5°
Field of View (V)	57.1°	46.3°
Field of View (D)	115.7°	92.4°
Lens Type	Fixed	
DORI		
DORI Distance (Lens)	2.8 mm	4 mm
DORI Distance (Detect)	86.9 m (285.1 ft.)	124.1 m (407.2 ft.)
DORI Distance (Observe)	34.8 m (114.2 ft.)	49.7 m (163.1 ft.)
DORI Distance (Recognize)	17.4 m (57.1 ft.)	24.8 m (81.4 ft.)
DORI Distance (Identify)	8.7 m (28.5 ft.)	12.4 m (40.7 ft.)
Illuminator		
Supplemental Light	Warm light	
Illumination Distance (Warm Light)	30 m (98.4 ft.)	
Light On/Off Control	Auto/Manual	
Video		
Video Compression	Ultra 265, H.265, H.264, MJPEG	
Frame Rate-Third Stream	D1 (720 × 576), max. 30 fps; 640 × 360, max. 30 fps; 2CIF (704 × 288), max. 30 fps; CIF (352 × 288), max. 30 fps	
H.264 Code Profile	Baseline profile, Main profile, High profile	
Video Bit Rate	128 Kbps to 16 Mbps	
U-code	Support	
OSD	Up to 8 OSDs	
Privacy Mask	Up to 4 areas	
ROI	Support	
Video Stream	Triple streams	
Frame Rate-Main Stream	8 MP (3840 × 2160), max. 20 fps; 5 MP (3072 × 1728), max. 30 fps; 4 MP (2560 × 1440), max. 30 fps; 1080P (1920 × 1080), max. 30 fps	

Frame Rate-Sub Stream	1080P (1920 × 1080), max. 30 fps; 720P (1280 × 720), max. 30 fps; D1 (720 × 576), max. 30 fps; 640 × 360, max. 30 fps; 2CIF (704 × 288), max. 30 fps; CIF (352 × 288), max. 30 fps
Image	
Smart Illumination	Support
White Balance	Auto, Outdoor, Fine Tune, Sodium Lamp, Locked, Auto2
Digital Noise Reduction	2D/3D DNR
Flip	Normal, Flip Vertical, Flip Horizontal, 180°, 90°Clockwise, 90°Anti-clockwise
Dewarping	Support
HLC	Support
BLC	Support
Defog	Digital defog
Intelligent	
Smart Intrusion Prevention	Cross line detection, intrusion detection, enter area detection, leave area detection (support false alarm filtering and the classification of human, non-motor vehicle and vehicle)
Statistical Analysis	N/A
People Counting	Support people flow counting and crowd density detection
Events	
Basic Detection	Motion detection, Ultra motion detection, Tampering alarm, Audio detection
General Function	Watermark, IP address filtering, Access policy, ARP protection, RTSP authentication, User authentication, HTTP authentication
Audio	
Audio Compression	G.711U, G.711A, AAC-LC
Audio Bitrate	G.711U/G.711A: 64 kbps, AAC-LC: 128 kbps
Two-way Audio	N/A
Suppression	Support
Sampling Rate	G.711U/G.711A: 8 kHz, AAC-LC: 8 kHz, 16 kHz, 48 kHz
Storage	
Edge Storage	MicroSD, up to 1 TB
Network Storage	ANR, NAS (NFS)
Network	
Protocols	IPv4, IPv6, IGMP, ICMP, ARP, TCP, UDP, DHCP, PPPoE, RTP, RTSP, RTCP, RTMP, DNS, DDNS, NTP, FTP, UPnP, HTTP, HTTPS, SMTP, 802.1x, SNMP, QoS, SSL/TLS, SSH
Compatible Integration	ONVIF (Profile S, Profile G, Profile T, Profile M), API, SDK
User/Host	Up to 32 users, 2 user levels: administrator and common user
Security	Password Protection, Strong Password, HTTPS Encryption, Export Operation Logs, Basic and Digest Authentication for RTSP, Digest Authentication for HTTP, TLS 1.2, WSSE and Digest Authentication for ONVIF
Client	EZStation, APP
Web Browser	Plug-in required live view: IE 10+, Chrome 45+, Firefox 52+, Edge 79+, Plug-in free live view: Chrome 57+, Firefox 58+, Edge 16+
Interface	
Audio I/O	N/A
Alarm I/O	N/A

Serial Port	N/A
Built-in Mic	Support
Built-in Speaker	N/A
WIFI	N/A
Network	1 × RJ45 10 M/100 M Base-TX Ethernet
Video Output	N/A
Certification	
EMC	CE-EMC (EN 55032: 2015+A1:2020,EN 61000-3-3: 2013+A1: 2019,EN IEC 61000-3-2: 2019+A1: 2021,EN 55035: 2017+A11:2020) FCC (FCC CFR 47 part15 B, ANSI C63.4-2014)
Safety	CE LVD (EN 62368-1:2014+A11:2017) CB (IEC 62368-1:2014) UL (UL 62368-1, 2nd Ed., Issue Date: 2014-12-01)
Environment	CE-RoHS (2011/65/EU;(EU)2015/863); WEEE (2012/19/EU); Reach (Regulation (EC) No 1907/2006)
Protection	IP67 (IEC 60529:1989+AMD1:1999+AMD2:2013)
General	
Power	DC 12 V±25%, PoE (IEEE 802.3af)
Power Consumption	Max. 8.0 W
Power Interface	Ø5.5 mm coaxial power plug
Dimensions	Ø111 mm × 95 mm (Ø4.4" × 3.7") (Ø × H)
Weight	0.44 kg (0.97 lb.)
Material	Metal
Working Environment	-30 ℃ to 60 ℃ (-22 ℉ to 140 ℉), Humidity: ≤ 95% RH (non-condensing)
Storage Environment	-30 ℃ to 60 ℃ (-22 ℉ to 140 ℉), Humidity: ≤ 95% RH (non-condensing)
Surge Protection	4 KV
Reset Button	N/A
Web Client Language	20 Languages: Traditional Chinese, English, Simplified Chinese, Polish, German, Russian, French, Korean, Dutch, Czech, Portuguese (Europe), Portuguese (Brazil), Japanese, Thai, Turkish, Spanish (Latin America), Spanish (Europe), Hungarian, Italian, Vietnamese

Dimensions

Aggregate product size diagram using IPC3618SE-ADF28KM-WL-I0 as an example

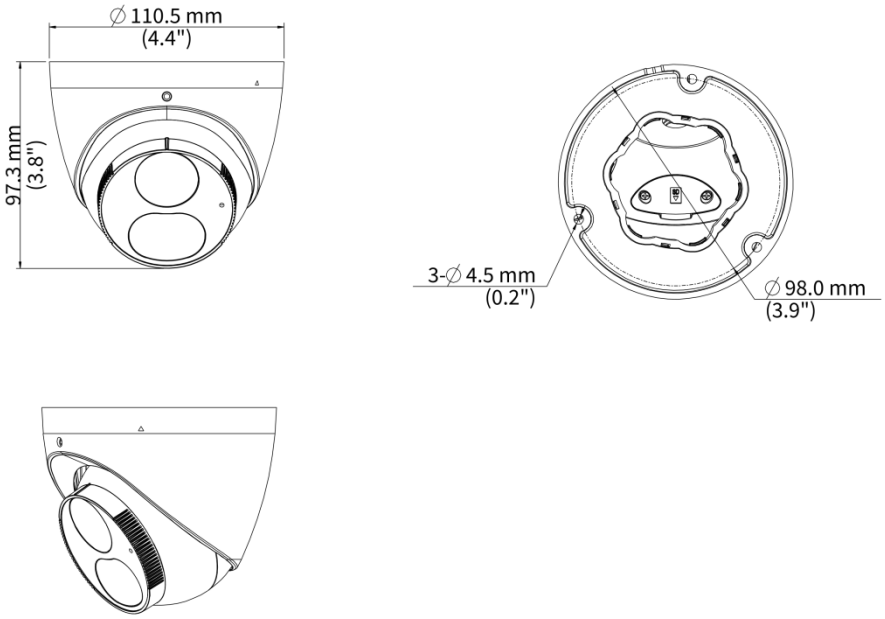

Accessories

TR-JB03-G-IN Mini Dome Junction Box(Support Wiring From Behind)	TR-A01-IN NPT 3/4'' Waterproof Cable Gland	TR-SE24-IN Dome Pendent Mounting Pole 200mm
TR-SE24-A-IN Dome Pendent Mounting Pole 500mm	**TR-CM24-IN** Dome Pendent Mounting Bracket(Indoor)	**TR-JB07/WM03-G-IN-V2** Wall Mounting Assembling Bracket For Dome&Mini Dome&Plastic Turret Camera

TR-WM03-D-IN-V2 Wall Mounting Bracket For Dome&Mini Dome&Plastic Turret Camera	TR-UC08-C-V2 Bullet&Dome Corner Mounting Bracket	TR-UP06-C-IN-V2 Pole Mounting Bracket For Bullet Junction Box Only
	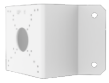	

Unlimited New View

Zhejiang Uniview Technologies Co., Ltd.

http://www.uniview.com

overseasbusiness@uniview.com; globalsupport@uniview.com

No. 369, Xietong Road, Xixing Sub-district, Binjiang District, Hangzhou City, 310051, Zhejiang Province, China

©2023-2026 Zhejiang Uniview Technologies Co., Ltd. All rights reserved.
*Product specifications and availability are subject to change without notice.
Despite our best efforts, technical or typographical errors may exist in this document. Uniview cannot be held responsible for any such errors and reserves the right to change the contents of this document without prior notice.