4MP HD ColorHunter Wide Angle Fixed Bullet Network Camera

IPC2K24SE-ADF40KMC-WL-I0

Features

- High quality image with 4 MP, 1/2.9" CMOS sensor
- 4 MP (3840 × 1080)@25 fps (human body detection off); 4 MP (3840 × 1080)@20 fps (human body detection on)
- The double lens splicing technology is adopted to realize the horizontal viewing angle of 160.00°±10°
- Ultra 265, H.265, H.264, MJPEG
- Supports human body detection
- ColorHunter technology ensures 24-hour full-color images
- Alarm I/O: 1/1
- Audio I/O: 1/1
- Built-in dual-mic and speaker
- MicroSD, up to 1 TB
- DC 12 V, PoE power supply

Specifications

Model	IPC2K24SE-ADF40KMC-WL-I0
Camera	
Max Resolution	4 MP
Sensor	1/2.9" CMOS
Min. Illumination	Color: 0.0005 Lux (F1.0, AGC ON)
Shutter	Auto/Manual, 1 ~ 1/100000s
Adjustment Angle	Pan: 0° to 360°, Tilt: 0° to 90°, Rotate: 0° to 360°
S/N	>52 dB
WDR	DWDR
Lens	
Focal Length	2 × 4.0 mm
Iris Type	Fixed
Iris	F1.0
Field of View (H)	160.0°±10°
Field of View (V)	43.2°
Field of View (D)	180.1°±10°
DORI	
DORI Distance (Lens)	4 mm
DORI Distance (Detect)	64.3 m (211.0 ft.)
DORI Distance (Observe)	25.7 m (84.3 ft.)
DORI Distance (Recognize)	12.9 m (42.3 ft.)
DORI Distance (Identify)	6.4 m (21.0 ft.)
Illuminator	
Supplemental Light	Warm light
Illumination Distance (Warm Light)	30 m (98.4 ft.)
Light On/Off Control	Auto/Manual
Video	
Video Compression	Ultra 265, H.265, H.264, MJPEG
Frame Rate	Main Stream: 4 MP (3840 × 1080), max. 25 fps (human body detection off) Sub Stream: 1920 × 540, max. 25 fps
H.264 Code Profile	Baseline profile, Main profile, High profile
Video Bit Rate	128 Kbps to 16 Mbps
U-code	Support
OSD	Up to 8 OSDs
Privacy Mask	Up to 4 areas
ROI	Support
Video Stream	Double streams
Image	
Smart Illumination	Support
White Balance	Auto, Outdoor, Fine Tune, Sodium Lamp, Locked, Auto2

Digital Noise Reduction	2D/3D DNR
Flip	N/A
Dewarping	N/A
HLC	Support
BLC	Support
Defog	Digital defog
Intelligent	
Smart Intrusion Prevention	N/A
Statistical Analysis	N/A
Events	
Basic Detection	Human body detection, Motion detection, Tampering alarm, Audio detection
General Function	Watermark, IP address filtering, Access policy, ARP protection, RTSP authentication, User authentication, HTTP authentication, Alarm input, Alarm output
Audio	
Audio Compression	G.711U, G.711A, AAC-LC
Audio Bitrate	G.711U/G.711A: 64 kbps, AAC-LC: 128 kbps
Two-way Audio	Support
Suppression	Support
Sampling Rate	G.711U/G.711A: 8 kHz, AAC-LC: 8 kHz, 16 kHz, 48 kHz
Storage	
Edge Storage	MicroSD, up to 1 TB
Network Storage	ANR, NAS (NFS)
Network	
Protocols	IPv4, IPv6, IGMP, ICMP, ARP, TCP, UDP, DHCP, PPPoE, RTP, RTSP, RTCP, RTMP, DNS, DDNS, NTP, FTP, UPnP, HTTP, HTTPS, SMTP, 802.1x, SNMP, QoS, SSL/TLS, SSH
Compatible Integration	API, SDK, ONVIF (Profile S, Profile G, Profile T, Profile M)
User/Host	Up to 32 users. 3 user levels: administrator, common user and operator
Security	Password Protection, Strong Password, HTTPS Encryption, Export Operation Logs, Basic and Digest Authentication for RTSP, Digest Authentication for HTTP, TLS 1.2, WSSE and Digest Authentication for ONVIF
Client	EZStation, APP
Web Browser	Plug-in required live view: IE 10+, Chrome 45+, Firefox 52+, Edge 79+, Plug-in free live view: Chrome 57+, Firefox 58+, Edge 16+
Interface	
Audio I/O	1 Input: impedance 35 kΩ, amplitude 2 V [p-p], 1 Output: impedance 600 Ω, amplitude 2 V [p-p]
Alarm I/O	1/1
Serial Port	N/A
Built-in Mic	Built-in dual-mic
Built-in Speaker	Support
WIFI	N/A
Network	1 × RJ45 10 M/100 M Base-TX Ethernet
Video Output	N/A
Certification	

EMC	CE-EMC (EN 55032: 2015+A1:2020,EN 61000-3-3: 2013+A1: 2019,EN IEC 61000-3-2: 2019+A1: 2021,EN 55035: 2017+A11:2020) FCC (FCC CFR 47 part15 B, ANSI C63.4-2014)
Safety	CE LVD (EN 62368-1:2014+A11:2017) CB (IEC 62368-1:2014) UL (UL 62368-1, 2nd Ed., Issue Date: 2014-12-01)
Environment	CE-RoHS (2011/65/EU;(EU)2015/863); WEEE (2012/19/EU); Reach (Regulation (EC) No 1907/2006)
Protection	IP67 (IEC 60529: 1989+AMD1: 1999+AMD2: 2013)
General	
Power	DC 12 V±25%, PoE (IEEE 802.3af)
Power Consumption	Max. 6.5 W
Power Interface	Ø5.5 mm coaxial power plug
Dimensions	273 mm × 130 mm × 76 mm (10.7" × 5.1" × 3.0") (L × W × H)
Weight	0.95 kg (2.09 lb.)
Material	Metal
Working Environment	-30 ℃ to 60 ℃ (-22 ℉ to 140 ℉), Humidity: ≤ 95% RH (non-condensing)
Storage Environment	-30 ℃ to 60 ℃ (-22 ℉ to 140 ℉), Humidity: ≤ 95% RH (non-condensing)
Surge Protection	4 KV
Reset Button	Support
Web Client Language	20 Languages: Traditional Chinese, English, Simplified Chinese, Polish, German, Russian, French, Korean, Dutch, Czech, Portuguese (Europe), Portuguese (Brazil), Japanese, Thai, Turkish, Spanish (Latin America), Spanish (Europe), Hungarian, Italian, Vietnamese

Dimensions

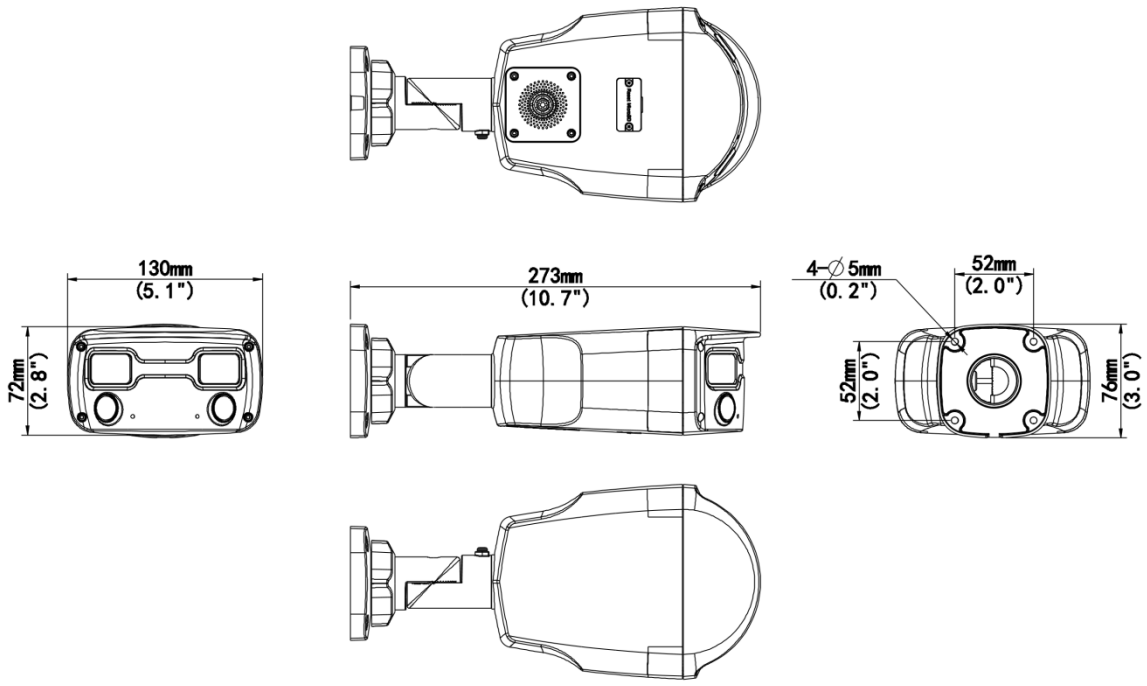

Accessories

TR-JB07-D-IN-V2 Bullet Junction Box(Support Wiring From Behind)	TR-JB06-A-IN Middle Bullet Junction Box(Elegant White)	TR-UP06-B-IN Bullet Pole Mounting Bracket
TR-A01-IN NPT 3/4'' Waterproof Cable Gland	**TR-UP06-C-IN-V2** Pole Mounting Bracket For Bullet Junction Box Only	**TR-UC08-C-V2** Bullet&Dome Corner Mounting Bracket

Unlimited New View

Zhejiang Uniview Technologies Co., Ltd.

http://www.uniview.com

overseasbusiness@uniview.com; globalsupport@uniview.com

No. 369, Xietong Road, Xixing Sub-district, Binjiang District, Hangzhou City, 310051, Zhejiang Province, China

©2023-2026 Zhejiang Uniview Technologies Co., Ltd. All rights reserved.

*Product specifications and availability are subject to change without notice.

Despite our best efforts, technical or typographical errors may exist in this document. Uniview cannot be held responsible for any such errors and reserves the right to change the contents of this document without prior notice.