# 6MP Infrared Intelligent Fixed-focal Fisheye Dome Network Camera

# IPC816SB-ADF16KMC-I1

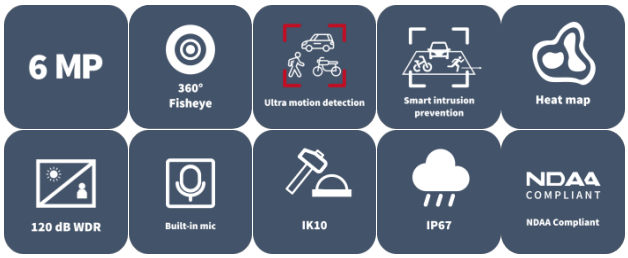


## Features

- High quality image with 6 MP, 1/2.5" CMOS sensor
- Max. 2560 × 2560 resolution
- Ultra 265, H.265, H.264, MJPEG
- Supports Wise-ISP technology, deeply optimizing color, detail, and smear effects in extremely low-light scenes
- Smart intrusion prevention, including cross line, intrusion
- Intelligent intrusion prevention system based on target classification significantly reduces false alarms caused by leaves, birds, and lights, accurately focusing on humans, vehicles, and non-motor vehicles
- Support ultra motion detection
- Heatmap: working with management platform, the data of moving objects is counted in real time on an intuitive color map
- Intelligent people flow counting and crowd density monitoring
- Ultra wide angle lens, 360° panoramic image
- Embedded infrared light, 360° fill in light, up to 15 m (49.2 ft.) IR distance
- Multiple decoding modes, supports software and hardware modes, provides interactive dynamic view
- Built in mic and speaker, supports two way audio
- MicroSD, up to 1 TB
- IK10 vandal resistant
- IP67 protection

# Specifications

| Model | IPC816SB-ADF16KMC-I1 |
|---|---|
| Camera | |
| Max Resolution | 6 MP |
| Sensor | 1/2.5" CMOS |
| Min. Illumination | Color: 0.005 Lux (F2.0, AGC ON), 0 Lux with IR |
| Day/Night | IR-cut filter with auto switch (ICR) |
| Shutter | Auto/Manual, 1 to 1/100000 s |
| S/N | > 52 dB |
| WDR | 120 dB |
| Lens | |
| Focal Length | 1.6 mm |
| Iris Type | Fixed |
| Field of View (H) | 180 ° |
| Field of View (V) | 180 ° |
| Field of View (D) | 180 ° |
| Iris | F2.0 |
| Lens Type | Fixed |
| DORI | |
| DORI Distance (Lens) | 1.6 mm |
| DORI Distance (Detect) | 36.0 m (118.1 ft.) |
| DORI Distance (Observe) | 14.4 m (47.2 ft.) |
| DORI Distance (Recognize) | 7.2 m (23.6 ft.) |
| DORI Distance (Identify) | 3.6 m (11.8 ft.) |
| Illuminator | |
| Illumination Distance (IR) | 15 m (49.2 ft.) |
| Supplemental Light | IR |
| IR On/Off Control | Auto/Manual |
| Wavelength | 850 nm |
| Video | |
| Main Stream | Fisheye View: 6 MP (2560 × 2560), max. 30 fps; 2048 × 2048, max. 30 fps; 1440 × 1440, max. 30 fps;<br>Panorama View: 6 MP (2560 × 2560), max. 30 fps; 2048 × 2048, max. 30 fps; 1440 × 1440, max. 30 fps;<br>PTZ View: 1920 × 1080, max. 30 fps; |
| Sub Stream | Fisheye View: 1024 × 1024, max. 30 fps; |
| Video Compression | Ultra 265, H.265, H.264, MJPEG |
| Third Stream | Fisheye View: D1 (720 × 576), max. 30 fps; CIF (352 × 288), max. 30 fps; |
| H.264 Code Profile | Baseline profile, Main profile, High profile |
| Video Bit Rate | 128 Kbps to 16 Mbps |
| U-code | Support |
| OSD | Up to 8 OSDs |

| | |
|---|---|
| Privacy Mask | Up to 4 areas |
| ROI | Up to 8 areas |
| Video Stream | Octuple Streams |
| Live View Display | |
| Hardware Decoding | Ceiling mount: fisheye view, fisheye + 4PTZ, horizontal panorama view, vertical panorama view<br>Table mount: fisheye view, fisheye + 4PTZ, horizontal panorama view, vertical panorama view<br>Wall mount: fisheye view, fisheye + 4PTZ, panorama view |
| Software Decoding | Ceiling mount: fisheye view, 360° panorama + 1PTZ, 180° panorama view, fisheye + 3PTZ, fisheye + 4PTZ, fisheye + 8PTZ, 360° panorama + 6PTZ<br>Table mount: fisheye view, 360° panorama + 1PTZ, 180° panorama view, fisheye + 3PTZ, fisheye + 4PTZ, fisheye + 8PTZ, 360° panorama + 6PTZ<br>Wall mount: fisheye view, 180° panorama view, 180° panorama view + 3PTZ, 180° panorama view + 4PTZ, 180° panorama view + 8PTZ |
| Image | |
| White Balance | Auto, Outdoor, Fine tune, Sodium lamp, Locked, Auto2, Area white balance |
| Digital Noise Reduction | 2D/3D DNR |
| Smart IR | Support |
| Flip | Normal, Flip vertical, Flip horizontal, 180° |
| Dewarping | N/A |
| HLC | N/A |
| BLC | Support |
| Defog | Digital defog |
| Image Stabilization | N/A |
| Intelligent | |
| Smart Intrusion Prevention | Cross line detection, intrusion detection (support false alarm filtering and the classification of human, non-motor vehicle and vehicle) |
| People Counting | Support people flow counting and crowd density detection |
| Statistical Analysis | Heat map (Working with management platform) |
| Events | |
| Basic Detection | Motion detection, Ultra motion detection, Tampering alarm, Audio detection |
| General Function | Watermark, IP address filtering, Access policy, ARP protection, RTSP authentication, User authentication, HTTP authentication, Alarm input, Alarm output |
| Audio | |
| Audio Compression | G.711U, G.711A, AAC-LC |
| Audio Bitrate | G.711U/G.711A: 64 kbps, AAC-LC: 128 kbps |
| Two-way Audio | Support |
| Suppression | Support |
| Sampling Rate | G.711U/G.711A: 8 kHz, AAC-LC: 8 kHz, 16 kHz, 48 kHz |
| Storage | |
| Edge Storage | MicroSD, up to 1 TB |
| Network Storage | ANR, NAS (NFS) |
| Network | |
| Protocols | IPv4, IPv6, IGMP, ARP, TCP, UDP, DHCP, PPPoE, RTP, RTSP, RTCP, RTMP, DNS, DDNS, NTP, FTP, |

| | |
|---|---|
| | HTTP, HTTPS, SMTP, 802.1x, SNMP, QoS, ICMP, SSL/TLS |
| Compatible Integration | ONVIF (Profile S, Profile G, Profile T, Profile M), SDK, API |
| User/Host | Up to 32 users. 3 user levels: administrator, common user and operator |
| Security | Password protection, Strong Password, HTTPS encryption, Export operation logs, Basic and Digest Authentication for RTSP, Digest Authentication for HTTP, WSSE and Digest Authentication for ONVIF, TLS 1.2 |
| Client | EZStation, APP |
| Interface | |
| Audio I/O | 1 Input: impedance 35 kΩ, amplitude 2 V [p-p], 1 Output: impedance 600 Ω, amplitude 2 V [p-p] |
| Alarm I/O | 1/1 |
| Serial Port | N/A |
| Built-in Mic | Built-in dual-mic |
| Built-in Speaker | Support |
| Network | 1 × RJ45 10 M/100 M Base-TX Ethernet |
| Video Output | N/A |
| Certification | |
| EMC | CE-EMC (EN 55032, EN 61000-3-3, EN IEC 61000-3-2, EN 50130-4)<br>FCC (FCC 47 CFR part15 B) |
| Safety | CE-LVD (EN 62368-1)<br>UL/CUL (UL 62368-1, CAN/CSA C22.2 No. 62368-1) |
| Environment | CE-RoHS (2011/65/EU ; (EU) 2015/863) ; WEEE (2012/19/EU) |
| Protection | IP67 (IEC 60529)<br>IK10 (IEC 62262) |
| General | |
| Power | DC 12 V±25%, PoE (IEEE 802.3af) |
| Power Consumption | Max. 8.4 W |
| Power Interface | Ø5.5 mm coaxial power plug |
| Dimensions | Ø126 mm × 52 mm (Ø5.0" × 2.1") (Ø × H) |
| Weight | 0.44kg （0.97lb） |
| Material | Metal + Plastic |
| Working Environment | -30 ℃ to 60 ℃ (-22 ℉ to 140 ℉), Humidity: ≤ 95% RH (non-condensing) |
| Storage Environment | -30 ℃ to 60 ℃ (-22 ℉ to 140 ℉), Humidity: ≤ 95% RH (non-condensing) |
| Surge Protection | 4 KV |
| Reset Button | Support |
| Web Client Language | 20 Languages: Traditional Chinese, English, Simplified Chinese, Polish, German, Russian, French, Korean, Dutch, Czech, Portuguese (Europe), Portuguese (Brazil), Japanese, Thai, Turkish, Spanish (Latin America), Spanish (Europe), Hungarian, Italian, Vietnamese |
| RTC | Support |

# Dimensions

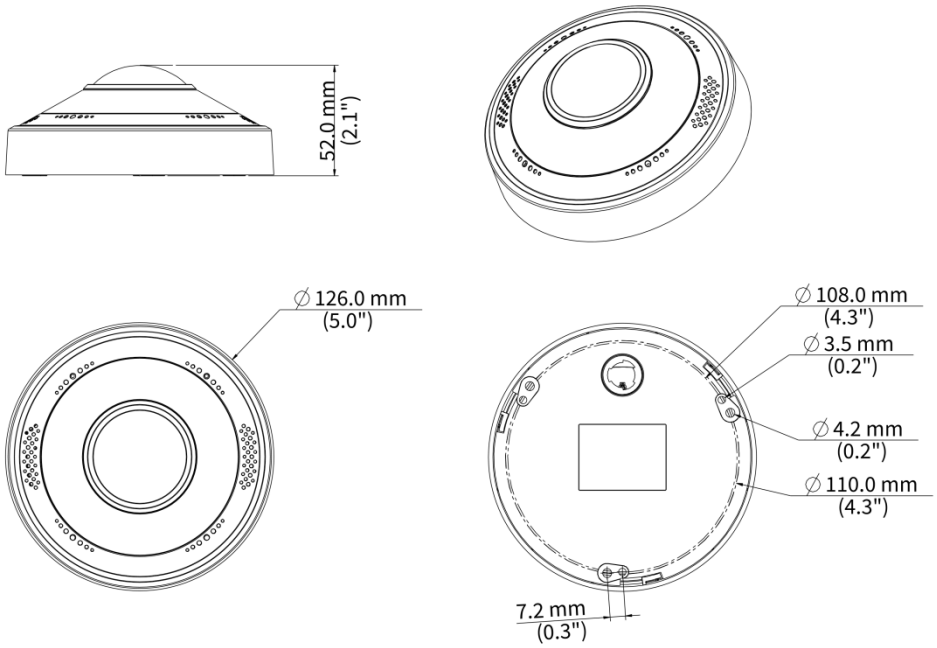


# Accessories

| TR-JB03-H-IN-V2<br>Turret Junction Box(Support Wiring From Behind) | TR-A01-IN<br>NPT 3/4'' Waterproof Cable Gland | TR-SE24-IN<br>Dome Pendent Mounting Pole 200mm |
|---|---|---|
| | | |
| **TR-SE24-A-IN**<br>Dome Pendent Mounting Pole 500mm | **TR-CM24-IN**<br>Dome Pendent Mounting Bracket(Indoor) | |
|  | | |

# Unlimited New View

**Zhejiang Uniview Technologies Co., Ltd.**

http://www.uniview.com

overseasbusiness@uniview.com; globalsupport@uniview.com

No. 369, Xietong Road, Xixing Sub-district, Binjiang District, Hangzhou City, 310051, Zhejiang Province, China

©2025-2026 Zhejiang Uniview Technologies Co., Ltd. All rights reserved.

*Product specifications and availability are subject to change without notice.

Despite our best efforts, technical or typographical errors may exist in this document. Uniview cannot be held responsible for any such errors and reserves the right to change the contents of this document without prior notice.