Smart Management Box

SMBOX01-R Series

Features

- Integrated design, combining the SMSERVER, smart power management module, power supply switch, heater, fan, and warning light into one. Most IPC and IP Speaker models can be installed on the smart management box.
- Users can remotely monitor the working status of the smart management box and its loaded devices and receive alarm notifications via mobile app and EZCloud.
- Supports automatic restart of power port for network devices. When the smart management box detects a network disconnection, it will automatically power off the network devices and restart them.
- Supports manual restart of PoE port. If devices such as IPC or IP Speaker are faulty, users can manually restart the PoE power output port of the cloud management server via mobile app and EZCloud.
- Equipped with surge protector, circuit breaker, and software protection function, forming a three-layer protection mechanism to effectively resist risks such as lightning, short circuit, overvoltage, and overcurrent.
- Integrated design eliminates the need for manual wiring, simplifying installation for users.

Specifications

Model	SMBOX01-R-US	SMBOX01-R-EU
Power Input		
Input Type	AC 100 V to 240 V	
Input Port	3-pin Connector, For the final installation, a UL 489-certified, 20-ampere circuit breaker must be be installed at the front end.	
Power Output		
Socket	1-ch 5A, US socket	1-ch 5A, EU socket
DC 12V	1-ch 2.5A, DC5521, Used for powering the router	
PoE	8 RJ45 10M/100M self adaptive Ethernet Interface	
PoE Power	Max 30 W for single port, Max 75 W in total	
PoE Standard	IEEE 802.3at, IEEE 802.3af	
Dedicated Power Interface (Pre-Wired Internal Cabling)		
Fan Power Interface	DC12V, 2.5A	
Heater Power Interface	AC 100 ~ 240V to DC 12V, 8A	
NVR Power Interface	AC 100 ~ 240V to DC 48V, 2.3A	
Router Power Interface	DC12V, 2.5A	
Warning Light Power Interface	DC12V, 2.5A	
Function		
System Functional Description	Overvoltage and Overload Protection,Power Information Collection,Power Switch Detection,Power Switch Control,Thermostatic Fan,Thermostatic Heater,Automatic Network Restart,Door Open Detection,Warning Light,Fault Reporting and Analysis	
SMSERVER		
Decoding Format	Ultra 265, H.265, H.264	
Decoding Capability	Smart Off: 2 x 16MP@30, 2 x 12MP@30, 4 x 4K@30, 8 x 4MP@30 Smart On: 2 x 12MP@30, 2 x 4K@30, 6 x 4MP@30, 8 x 3MP@30	
Audio Compression	G.711A, G.711U	
Bandwidth	80 Mbps	
Protocols	TCP/IP, P2P, NTP, DHCP, PPPoE, HTTP, HTTPS, DNS, DDNS, SNMP, SMTP, RTSP, IPv6, IPv4	
IP Video Input	8-ch	
FTP/Schedule/Event Snapshot	4-ch snapshot (max. 8 MP (3840 × 2160) video resolution, with 1080P snapshot resolution)	
Recording Resolution	16 MP/12 MP/8 MP/6 MP/5 MP/4 MP/3 MP/1080P/960P/720P/D1/2CIF/CIF	
Smart by IPC	Face Detection,Face Comparison,Vehicle Detection,SIP (Intrusion Detection, Cross Line Detection, Enter Area, Leave Area),Ultra Motion Detection (UMD),Temperature Detection (Fire Detection, Smoking Detection, Temperature Measurement, Smoke and Fire Detection),People Counting (People Flow Counting, Crowd Density Monitoring),Video Metadata,Traffic Monitoring	
Smart by SMBOX	Face Detection,Face Comparison,Ultra Motion Detection (UMD),Smart Intrusion Prevention (SIP)	
VCA Search	Face Snapshot Search, Face Comparison Search, Motor Vehicle Search, Non-Motor Vehicle Search, Human Body Search, General Search, People Counting Report, Heat Map, SmartSearch+, AcuSearch	
face detection by SMBOX with	8-ch	

face detection cameras	
face detection by SMBOX with normal cameras	2-ch
Vehicle Picture Library	Up to 5 vehicle picture libraries, with up to 25,000 vehicle pictures in total
SIP by SMBOX	4-ch
UMD by SMBOX	8-ch
Capacity of Snapshot Records	500 thousand records for face snapshot, One and a half millions records for SIP and vehicle
General Alarm	Defocus Detection, Scene Change Detection, Object Left Behind, Object Removed, Auto Tracking, Motion Detection, Tampering, Human Body Detection, Video Loss, Alarm Input, Audio Detection
Alert Alarm	IP Conflict, Network Disconnected, Disk Offline, Disk Abnormal, Illegal Access, Hard Disk Space Low, Hard Disk Full, Recording/Snapshot Abnormal, Array Damaged, Array Degraded
Network Interface	1 RJ45 10 M/100 M/1000 M self-adaptive Ethernet Interface
USB	1 × USB2.0, 1 × USB3.0
Alarm In	4-ch
Alarm Out	2-ch
ONVIF	Support
Hard Disk	
Hard Disk	1 x SATA interface, up to 16TB HDD (2.5" or 3.5"), or up to 4TB SSD (2.5")
Power Lightning Protector	
Maximum discharge current	40 kA
Rated discharge current	20 kA
Response time	L-PE ≤ 25 ns, N-PE ≤ 25 ns
General	
Surge Protection	6 kV
Working Temperature	When using HDDs: -40 ℃ to 60 ℃ (-40 ℉ to 140 ℉); When using SSDs: -40 ℃ to 70 ℃ (-40 ℉ to 158 ℉)
Working Humidity	≤ 90% RH (non condensing)
Weight (Without Camera)	≤ 16 kg (35.27 lb)
Dimensions	650 (H) × 424 (W) × 230 (D) mm
Slot dimensions	The space has a depth of 55mm and a width of 190mm for installing a 4G router, Select a 4G router with DC 12V round plug power supply, total power consumption not exceeding 30W, and at least 2 LAN ports.
Rating	IP56, Custom stainless-steel enclosures available to meet NEMA 4X requirements.
Certification	CE-EMC, FCC
Consumption	
No-load power consumption	At ambient temperature of 25°C: 13.7 W (No HDD, No HDD heating, No Heater, No Fan, No Alarm Light)
Full-load power consumption	At ambient temperature of 25°C: 247.2 W (16T HDD, HDD Heating, Heater, Full POE Output (75W), Fan, Alarm Light)
SMSERVER power consumption	At ambient temperature of 25°C: ≤8W (No HDD+ No POE Output)

	96.5W (Full POE Output + 16T HDD) 122.2W (Full POE Output + 16T HDD + Heating Film)
Adaptable Mounting Bracket	
Left side	Up to 2 units can be installed, supporting TR-JB07/WM03-F-IN-V2, TR-JB07/WM03-G-IN-V2, TR-JB07/WM03-H-IN-V2, TR-JB07/WM04-B-IN-V2, TR-JB05-B-IN or TR-JB07-D-IN-V2
Right side	Up to 2 units can be installed, supporting TR-JB07/WM03-F-IN-V2, TR-JB07/WM03-G-IN-V2, TR-JB07/WM03-H-IN-V2, TR-JB07/WM04-B-IN-V2, TR-JB05-B-IN or TR-JB07-D-IN-V2
Bottom	Up to 1 unit can be installed, which cannot be installed simultaneously with the IP Speaker and supports TR-UF45-A-IN (Only 4-inch PTZ)
Top	Support the installation of an IP speaker, no mounting bracket required.

Dimensions

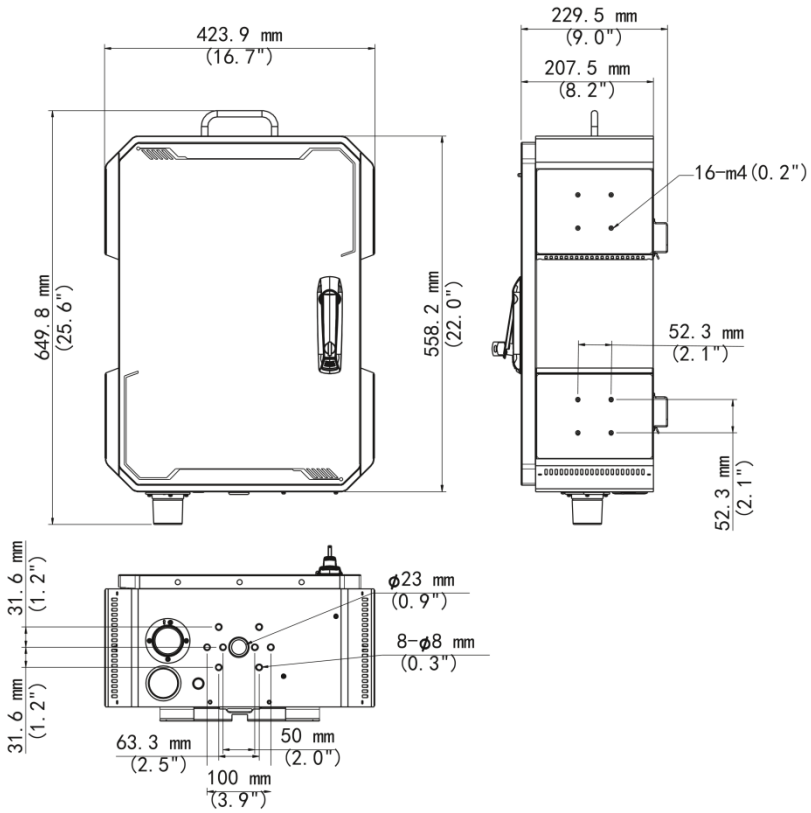

Unlimited New View

Zhejiang Uniview Technologies Co., Ltd.

http://www.uniview.com

overseasbusiness@uniview.com; globalsupport@uniview.com

No. 369, Xietong Road, Xixing Sub-district, Binjiang District, Hangzhou City, 310051, Zhejiang Province, China

©2025-2026 Zhejiang Uniview Technologies Co., Ltd. All rights reserved.

*Product specifications and availability are subject to change without notice.

Despite our best efforts, technical or typographical errors may exist in this document. Uniview cannot be held responsible for any such errors and reserves the right to change the contents of this document without prior notice.