# 8MP HD Intelligent Light and Audible Warning Fixed Bullet Network Camera

# IPC2B18SS-ADF28(40)KMC-I1

## Features

- High quality image with 8 MP, 1/2.8" CMOS sensor
- 8 MP (3840 × 2160)@30/25 (default) fps; 5 MP (3072 × 1728)@30/25 fps; 4 MP (2560 × 1440)@30/25 fps; 1080P (1920 × 1080)@30/25 fps
- Ultra 265, H.265, H.264, MJPEG
- Intelligent perimeter protection, including cross line, intrusion, enter area, leave area detection
- Intelligent intrusion prevention system based on target classification significantly reduces false alarms caused by leaves, birds, and lights, accurately focusing on humans, vehicles, and non-motor vehicles
- Intelligent people flow counting and crowd density monitoring
- Smart intrusion prevention with color retrieval
- ASM (auto scene match)
- 130 dB true WDR technology enables clear image in strong light scene
- Supports red and blue warning light
- Supports 9:16 corridor mode
- Alarm I/O: 1/1, audio I/O: 1/1, built-in mic and speaker
- Smart IR, up to 40 m (131.2 ft) IR distance
- MicroSD, up to 1 TB
- IP67 protection and IK10 vandal resistant

# Specifications

| Model | IPC2B18SS-ADF28KMC-I1 | IPC2B18SS-ADF40KMC-I1 |
|---|---|---|
| Camera | | |
| Max Resolution | 8 MP | |
| Sensor | 1/2.8" CMOS | |
| Min. Illumination | Color: 0.001 Lux ( F1.0, AGC ON), 0 Lux with light | |
| Day/Night | IR-cut filter with auto switch (ICR) | |
| Shutter | Auto/Manual, 1 ~ 1/100000s | |
| Adjustment Angle | Pan: 0° to 360°, Tilt: 0° to 90°, Rotate: 0° to 360° | |
| S/N | >56 dB | |
| WDR | 130 dB | |
| Lens | | |
| Focal Length | 2.8 mm | 4.0 mm |
| Iris Type | Fixed | |
| Iris | F1.0 | |
| Field of View (H) | 106.5° | 92° |
| Field of View (V) | 57.9° | 51° |
| Field of View (D) | 132° | 106° |
| DORI | | |
| DORI Distance (Lens) | 2.8 mm | 4 mm |
| DORI Distance (Detect) | 86.9 m (285.1 ft.) | 124.1 m (407.2 ft.) |
| DORI Distance (Observe) | 34.8 m (114.2 ft.) | 49.7 m (163.1 ft.) |
| DORI Distance (Recognize) | 17.4 m (57.1 ft.) | 24.8 m (81.4 ft.) |
| DORI Distance (Identify) | 8.7 m (28.5 ft.) | 12.4 m (40.7 ft.) |
| Illuminator | | |
| Supplemental Light | Dual light | |
| Illumination Distance (IR) | IR 40 m (131.2 ft.), warm light 40 m (131.2 ft.) | |
| Illumination Distance (Warm Light) | IR 40 m (131.2 ft.), warm light 40 m (131.2 ft.) | |
| IR On/Off Control | Auto/Manual | |
| Wavelength | 850 nm | |
| Light On/Off Control | Auto/Manual | |
| Video | | |
| Video Compression | Ultra 265, H.265, H.264, MJPEG | |
| H.264 Code Profile | Baseline profile, Main profile, High profile | |
| Frame Rate | Main Stream: 8 MP (3840 × 2160), max. 30 fps; 5 MP (3072 × 1728), max. 30 fps; 4 MP (2560 × 1440), max. 30 fps; 1080P (1920 × 1080), max. 30 fps; 720P (1280 × 720), max. 30 fps;<br>Sub Stream: 720P (1280 × 720), max. 30 fps; D1 (720 × 576), max. 30 fps; 640 × 360, max. 30 fps; 2CIF (704 × 288), max. 30 fps; CIF (352 × 288), max. 30 fps;<br>Third Stream: D1 (720 × 576), max. 30 fps; 640 × 360, max. 30 fps; 2CIF (704 × 288), max. 30 fps; CIF (352 × 288), max. 30 fps; | |
| Video Bit Rate | 128 Kbps to 16 Mbps | |

| | |
|---|---|
| U-code | Support |
| OSD | Up to 8 OSDs |
| Privacy Mask | Up to 4 areas |
| ROI | Support |
| Video Stream | Triple streams |
| Image | |
| White Balance | Auto, Outdoor, Fine tune, Sodium lamp, Locked, Auto2 |
| Smart IR | Support |
| Digital Noise Reduction | 2D/3D DNR |
| Auto Scene Match (ASM) | Support (only WDR) |
| Flip | Normal, Vertical, Horizontal, 180°, 90° Clockwise, 90° Anti-clockwise |
| Dewarping | N/A |
| HLC | Support |
| BLC | Support |
| Defog | Digital defog |
| Intelligent | |
| Smart Intrusion Prevention | Cross line detection, intrusion detection, enter area detection, leave area detection (support false alarm filtering and the classification of human, non-motor vehicle and vehicle) |
| Statistical Analysis | N/A |
| People Counting | Support people flow counting and crowd density detection |
| Attribute Collection | SIP with color retrieval |
| Events | |
| Basic Detection | Motion detection, Ultra motion detection, Tampering alarm, Audio detection, Object removed, Object Left Behind |
| General Function | Watermark, IP address filtering, Access policy, ARP protection, RTSP authentication, User authentication, HTTP authentication, Alarm input, Alarm output |
| Audio | |
| Audio Compression | G.711U, G.711A, AAC-LC |
| Audio Bitrate | G.711U/G.711A: 64 kbps, AAC-LC: 128 kbps |
| Two-way Audio | Support |
| Suppression | Support |
| Sampling Rate | G.711U/G.711A: 8 kHz, AAC-LC: 8 kHz, 16 kHz, 48 kHz |
| Storage | |
| Edge Storage | MicroSD, up to 1 TB |
| Network Storage | ANR, NAS (NFS) |
| Network | |
| Protocols | IPv4, IPv6, IGMP, ICMP, ARP, TCP, UDP, DHCP, PPPoE, RTP, RTSP, RTCP, RTMP, DNS, DDNS, NTP, FTP, UPnP, HTTP, HTTPS, SMTP, 802.1x, SNMP, QoS, SSL/TLS, SSH |
| Compatible Integration | API, SDK, ONVIF (Profile S, Profile G, Profile T, Profile M) |
| User/Host | Up to 32 users. 3 user levels: administrator, common user and operator |
| Security | Password Protection, Strong Password, HTTPS Encryption, Export Operation Logs, Basic and Digest Authentication for RTSP, Digest Authentication for HTTP, TLS 1.2, WSSE and Digest Authentication for ONVIF |

| | |
|---|---|
| Client | EZStation, APP |
| Web Browser | Plug-in required live view: IE 10+, Chrome 45+, Firefox 52+, Edge 79+, Plug-in free live view: Chrome 57+, Firefox 58+, Edge 16+ |
| Interface | |
| Audio I/O | 1 Input: impedance 35 kΩ, amplitude 2 V [p-p], 1 Output: impedance 600 Ω, amplitude 2 V [p-p] |
| Alarm I/O | 1/1 |
| Serial Port | N/A |
| Built-in Mic | Support |
| Built-in Speaker | Support |
| WIFI | N/A |
| Network | 1 × RJ45 10 M/100 M Base-TX Ethernet |
| Video Output | N/A |
| Certification | |
| EMC | CE-EMC (EN 55032, EN 61000-3-3, EN IEC 61000-3-2, EN 50130)<br>FCC (FCC 47 CFR part15 B) |
| Safety | CE-LVD (EN 62368-1)<br>CB (IEC 62368-1)<br>UL/CUL (UL 62368-1, CAN/CSA C22.2 No. 62368-1) |
| Environment | CE-RoHS (2011/65/EU;(EU)2015/863); WEEE (2012/19/EU) |
| Protection | IP67 (IEC 60529) |
| General | |
| Power | DC 12 V±25%, PoE (IEEE 802.3af) |
| Power Consumption | Max. 10.0 W |
| Power Interface | Ø5.5 mm coaxial power plug |
| Dimensions | 265.2 mm × 95.2 mm × 85.1 mm (10.4" × 3.7" × 3.4" ) (L × W × H) |
| Weight | 0.97 kg (2.14 lb.) |
| Material | Metal + Plastic |
| Working Environment | -30 ℃ to 60 ℃ (-22 ℉ to 140 ℉), Humidity: ≤ 95% RH (non-condensing) |
| Storage Environment | -30 ℃ to 60 ℃ (-22 ℉ to 140 ℉), Humidity: ≤ 95% RH (non-condensing) |
| Surge Protection | 4 KV |
| Reset Button | Support |
| Web Client Language | 20 Languages: Traditional Chinese, English, Simplified Chinese, Polish, German, Russian, French, Korean, Dutch, Czech, Portuguese (Europe), Portuguese (Brazil), Japanese, Thai, Turkish, Spanish (Latin America), Spanish (Europe), Hungarian, Italian, Vietnamese |

# Dimensions

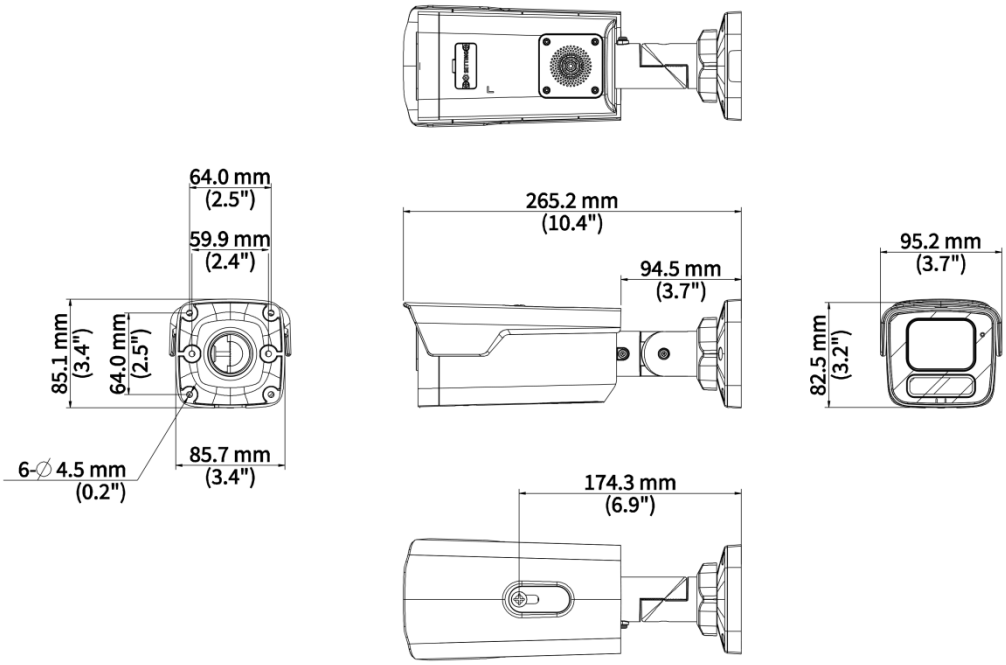


# Accessories

| TR-JB07-D-IN-V2<br>Bullet Junction Box(Support Wiring From Behind) | TR-JB06-A-IN<br>Middle Bullet Junction Box(Elegant White) | TR-UP06-B-IN<br>Bullet Pole Mounting Bracket |
|---|---|---|
| | | |
| **TR-A01-IN**<br>NPT 3/4'' Waterproof Cable Gland | **TR-UP06-C-IN-V2**<br>Pole Mounting Bracket For Bullet Junction Box Only | **TR-UC08-C-V2**<br>Bullet&Dome Corner Mounting Bracket |
| | | |

# Unlimited New View

**Zhejiang Uniview Technologies Co., Ltd.**

http://www.uniview.com

overseasbusiness@uniview.com; globalsupport@uniview.com

No. 369, Xietong Road, Xixing Sub-district, Binjiang District, Hangzhou City, 310051, Zhejiang Province, China

©2023-2026 Zhejiang Uniview Technologies Co., Ltd. All rights reserved.

*Product specifications and availability are subject to change without notice.

Despite our best efforts, technical or typographical errors may exist in this document. Uniview cannot be held responsible for any such errors and reserves the right to change the contents of this document without prior notice.