8MP HD IR Fixed Eyeball Network Camera

EC-T8F28M-V1





Features

- High quality image with 8 MP, 1/2.7" CMOS sensor
- 8 MP (3840 × 2160)@15 fps; 5 MP (2880 × 1620)@25/20 fps; 4 MP (2560 × 1440)@25/20 fps; 3 MP (2304 × 1296)@30/25 fps; 1080P (1920 × 1080)@30/25 fps
- Ultra 265, H.265, H.264, MJPEG (Sub Stream Only)
- 120 dB true WDR technology enables clear image in strong light scene
- Supports 9:16 corridor mode
- Built-in mic
- Smart IR, up to 30 m (98.4 ft.) IR distance
- MicroSD, up to 512 GB
- IP67 protection
- Supports PoE power supply

Specifications

Model	EC-T8F28M-V1
Camera	
Max Resolution	8 MP
Sensor	1/2.7" CMOS
Min. Illumination	Color: 0.003 Lux (F1.6, AGC ON), 0 Lux with IR on
Day/Night	IR-cut filter with auto switch (ICR)
Shutter	Auto/Manual, 1 ~ 1/100000s
Adjustment Angle	Pan: 0° to 360°, Tilt: 0° to 80°, Rotate: 0° to 360°
S/N	>52 dB
WDR	120 dB
Lens	
Focal Length	2.8 mm
Iris	F1.6
Field of View (H)	110.1 °
Field of View (V)	59.0 °
Field of View (D)	131.5 °
Lens Type	Fixed
Iris Type	Fixed
DORI	
DORI Distance (Lens)	2.8 mm
DORI Distance (Detect)	63.0 m (206.6 ft.)
DORI Distance (Observe)	25.2 m (82.7 ft.)
DORI Distance (Recognize)	12.6 m (41.3 ft.)
DORI Distance (Identify)	6.3 m (20.7 ft.)
Illuminator	
Supplemental Light	IR
Illumination Distance (IR)	30 m (98.4 ft.)
Wavelength	850 nm
IR On/Off Control	Auto/Manual
Video	
Video Compression	Ultra 265, H.265, H.264, MJPEG (Sub Stream Only)
H.264 Code Profile	Baseline profile, Main profile, High profile
Frame Rate	Main Stream: 8 MP (3840 × 2160)@15 fps; 5 MP (2880 × 1620), max. 25 fps; 4 MP (2560 × 1440), max. 25 fps; 3 MP (2304 × 1296), max. 30 fps; 1080P (1920 × 1080), max. 30 fps; 720P (1280 × 720), max. 30 fps; Sub Stream: 720P (1280 × 720), max. 30 fps; D1 (720 × 576), max. 30 fps; 640 × 360, max. 30 fps; 2CIF (704 × 288), max. 30 fps; CIF (352 × 288), max. 30 fps;
Video Bit Rate	128 Kbps to 6144 Kbps
OSD	Up to 4 OSDs
Privacy Mask	Up to 4 areas
U-code	Support

ROI	Support
Video Stream	Dual streams
Image	
White Balance	Auto, Outdoor, Fine tune, Sodium lamp, Locked, Auto2, Area white balance
Digital Noise Reduction	2D/3D DNR
Smart IR	Support
Flip	Normal, Flip vertical, Flip horizontal, 180°, 90° Clockwise, 90° Anti-clockwise
HLC	Support
Dewarping	N/A
BLC	Support
Defog	Digital defog
Events	
Basic Detection	Motion detection, Tampering alarm, Audio detection, Cross line (based on human body detection), Intrusion (based on human body detection)
General Function	Watermark, IP address filtering, Access policy, ARP protection, RTSP authentication, User authentication, HTTP authentication
Audio	
Audio Compression	G.711U, G.711A, AAC-LC
Audio Bitrate	G.711U/G.711A: 64 kbps, AAC-LC: 128 kbps
Two-way Audio	N/A
Suppression	Support
Sampling Rate	G.711U/G.711A: 8 kHz, AAC-LC: 8 kHz, 16 kHz, 48 kHz
Storage	
Edge Storage	MicroSD, up to 512 GB
Network Storage	ANR, NAS (NFS)
Network	
Protocols	IPv4, IGMP, ICMP, ARP, TCP, UDP, DHCP, RTP, RTSP, RTCP, RTMP, DNS, DDNS, NTP, FTP, UPnP, HTTP, HTTPS, SMTP, QoS, SSL/TLS, SNMP, IPv6
Compatible Integration	ONVIF (Profile S, Profile G, Profile T), API, SDK
Client	EZStation, APP
Web Browser	Plug-in required live view: IE 10+, Chrome 45+, Firefox 52+, Edge 79+, Plug-in free live view: Chrome 57+, Firefox 58+, Edge 16+
Security	Password Protection, Strong Password, HTTPS Encryption, Export Operation Logs, Basic and Digest Authentication for RTSP, Digest Authentication for HTTP, TLS 1.2, WSSE and Digest Authentication for ONVIF
User/Host	Up to 32 users. 3 user levels: administrator, common user and operator
Interface	
Audio I/O	N/A
Alarm I/O	N/A
Serial Port	N/A
Built-in Mic	Support
Built-in Speaker	N/A
WIFI	N/A

Network	1 × RJ45 10 M/100 M Base-TX Ethernet
Video Output	N/A
Certification	
EMC	CE-EMC (EN 55032, EN 61000-3-3, EN IEC 61000-3-2, EN 50130-4) FCC (FCC 47 CFR part15 B)
Safety	CE-LVD (EN 62368-1) UL/CUL (UL 62368-1, CAN/CSA C22.2 No. 62368-1)
Protection	IP67 (IEC 60529)
Environment	CE-RoHS (2011/65/EU ; (EU) 2015/863) ; WEEE (2012/19/EU)
General	
Power	DC 12 V±25%, PoE (IEEE 802.3af)
Power Consumption	Max. 3.6 W
Power Interface	Ø5.5 mm coaxial power plug
Dimensions	Ø108.5 mm × 98.6 mm (Ø4.3" × 3.9") (Ø × H)
Weight	0.44 kg (0.97 lb.)
Material	Metal + Plastic
Working Environment	-30 ℃ to 60 ℃ (-22 ℉ to 140 ℉), Humidity: ≤ 95% RH (non-condensing)
Storage Environment	-30 ℃ to 60 ℃ (-22 ℉ to 140 ℉), Humidity: ≤ 95% RH (non-condensing)
Surge Protection	4 KV
Reset Button	Support
Web Client Language	5 Languages: English, Russian, Spanish, Vietnamese, Turkish

Dimensions

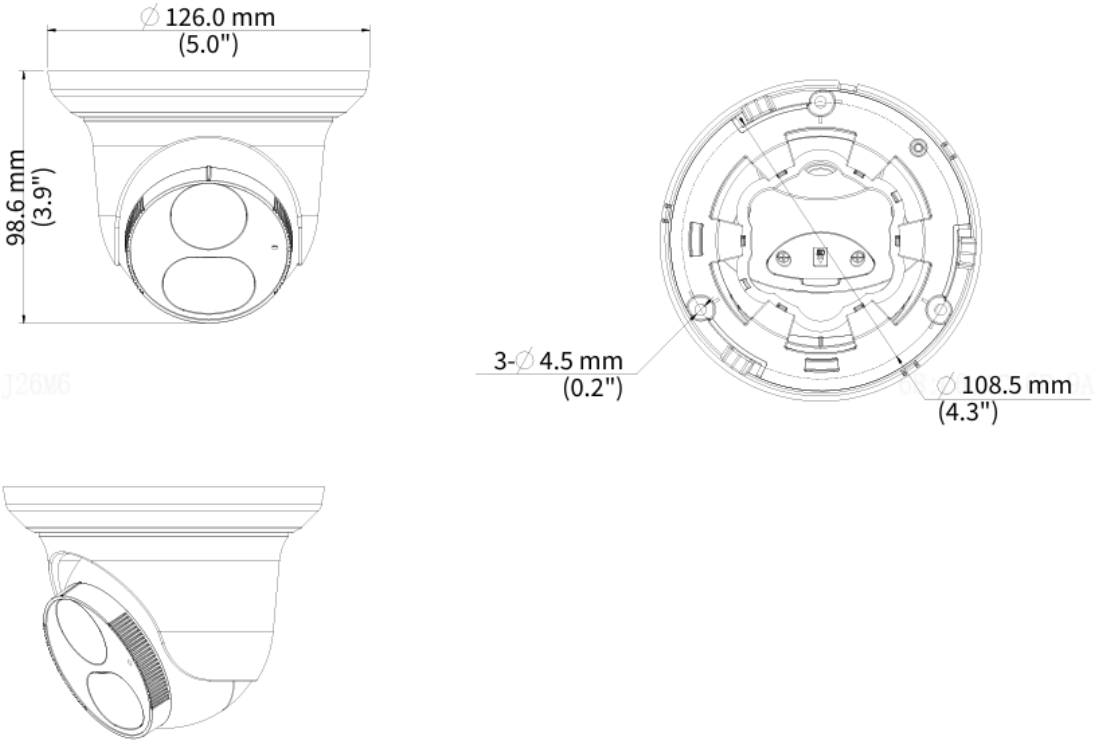

Unlimited New View

Zhejiang Uniview Technologies Co., Ltd.

http://www.uniview.com

overseasbusiness@uniview.com; globalsupport@uniview.com

No. 369, Xietong Road, Xixing Sub-district, Binjiang District, Hangzhou City, 310051, Zhejiang Province, China

©2026 Zhejiang Uniview Technologies Co., Ltd. All rights reserved.

*Product specifications and availability are subject to change without notice.

Despite our best efforts, technical or typographical errors may exist in this document. Uniview cannot be held responsible for any such errors and reserves the right to change the contents of this document without prior notice.