2MP Fixed Two-way Audio & Active Deterrence Dual-light Turret Analog Camera

UAC-T142-ACF28(40)LM-DL





Overview

UAC-T142-ACF28(40)LM-DL is a 2MP ColorHunter with active deterrence dual-light turret analog camera with a high-performance 1/3-inch CMOS sensor and 3D noise reduction technology. It supports TVI/AHD/CVI/CVBS, which effectively enhances product adaptability and diversity of networking solutions. With SYV-75-3 or other coaxial cable types, the camera can achieve low-cost, long-distance, and anti-interference mega-pixel HD video transmission without time delay. The ColorHunter camera is equipped with two-way audio communication and strobe light alarm capabilities. Pairing with the Q4-series XVR, the camera allows for real-time communication while actively deterring intruders with lights and alarms when unattended. The system provides real-time alerts to users through coaxial cables, offering a safer living environment.

Features

Note: To use the two-way audio & active deterrence dual-light analog camera, make sure it is used with our XVR301-04Q4/XVR301-08Q4/XVR301-16Q4, and the XVR must be upgraded to the latest version.

- High quality imaging with 2MP resolution
- TVI/AHD/CVI/CVBS
- Supports IR-cut filter with auto-switch (ICR)
- Two-way audio (Only TVI 1080P)
- Dual-light active deterrence (only TVI)
- Active defense with visual and auditory warnings (Only TVI 1080P)
- High-quality audio through coaxial cables, built-in microphone, and built-in speaker
- 3D noise reduction technology delivers clean and sharp images

- Supports 180° horizontal flip, 180° vertical flip
- OSD configuration menu, easy to operate
- IP67 waterproof and dustproof design, high reliability
- OSD configuration menu in 11 languages

Specifications

Model	UAC-T142-ACF28LM-DL	UAC-T142-ACF40LM-DL
Camera		
Max Resolution	2 MP	
Sensor Size	1/3.0" CMOS	
Min. Illumination	0.003 lux (F1.6, AGC ON) 0 lux (Illuminator ON)	
Lens		
Focus	2.8 mm	4.0 mm
Lens Mount	M12	
Angle of View (H)	96.5°	52.0°
Angle of View (V)	54.5°	31.0°
Angle of View (D)	109.5°	59.0°
Illuminator		
Illuminator Number	One IR illuminator; One white-light illuminator	
Illumination Distance	IR: 40m (131.23 ft) White light: 40m (131.23ft)	
Lifetime	≥ 60000 hours	
Video		
Resolution	1080P: 1920(H)×1080(V) 720P: 1280(H) ×720(V)	
Frame Rate	TVI: 1080P@25fps (default), 1080P@30fps; 720P@25fps, 720P@30fps AHD: 1080P@25fps, 1080P@30fps; 720P@25fps, 720P@30fps CVI: 1080P@25fps, 1080P@30fps; 720P@25fps, 720P@30fps CVBS: PAL, NTSC	
Shutter Time	PAL: 1/25 s-1/50000 s, NTSC: 1/30 s-1/50000 s	
Image		
Exposure Mode	Four modes: Global (default), BLC, HLC, DWDR	
Day/Night	Three modes: Auto (default), Day, Night	
Digital Noise Reduction	2D/3D	
White Balance	Two modes: Auto (default), Manual	
WDR	DWDR	
Light Mode	Dual light (default) , Infrared, White light	
Flip	Supports 180°horizontal flip, 180°vertical flip	
Digital Defog	N/A	
Audio		
Built-in Mic	Support	
Camera Audio	TVI: 1080P@25fps, 1080P@30fps	

	CVI: 1080P@25fps, 1080P@30fps
Two-way Audio	Support
Interface	
Power Interface	5.5 mm Power Interface
Video Output	BNC, supports TVI/AHD/CVI/CVBS
Operating Environment	
Temperature	-30 ℃ to 60 ℃ (-22 ℉ to 140 ℉)
Humidity	≤ 95% RH (non-condensing)
Surge Protection	4 KV for power, 4 KV for video output interfaces
General	
Power	DC 12 V±25%
Power Consumption	MAX 5.3 W
Mount	Corner Mount, Pole Mount, Wall Mount, Pendant Mount
Dimensions	Φ117.8mm*96.5mm (diameter*height)
Material	Metal + Plastic
Weight	256g(0.57lb)
OSD Menu Language	11 Languages: English, German, Spanish (Latin America), French, Italian, Japanese, Korean, Polish, Portuguese (Brazil), Russian, Turkish
Certification	
EMC	CE-EMC (EN 55032, EN 61000-3-3, EN IEC 61000-3-2, EN 50130-4), FCC (FCC 47 CFR part15 B)
Safety	CE-LVD (EN IEC 62368-1)
Environment	CE-RoHS (2011/65/EU; (EU) 2015/863); WEEE (2012/19/EU)
Protection	IP67 (IEC 60529)

Dimensions

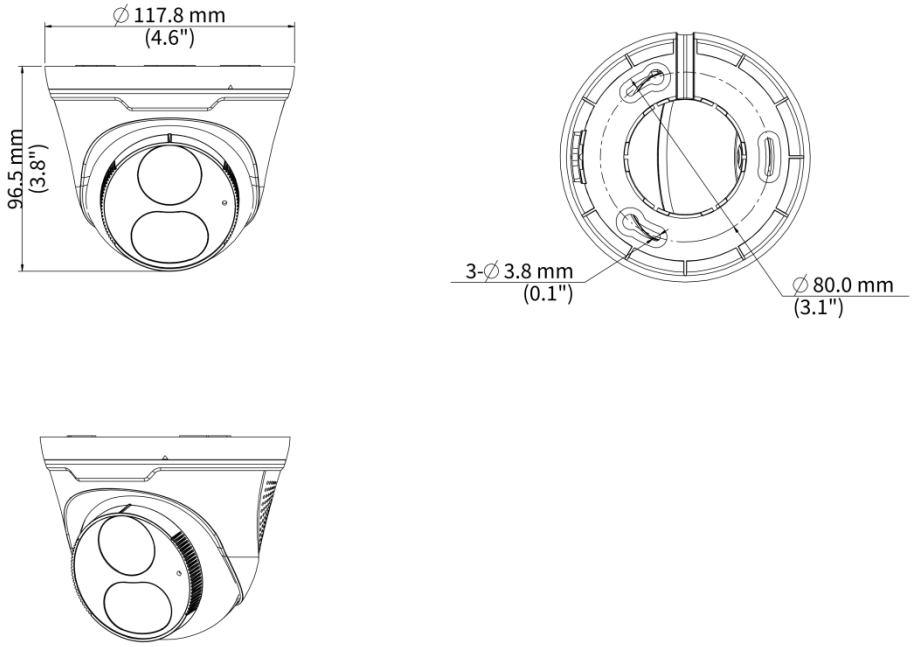

Accessories

TR-JB03-I-IN	TR-WM07P-B	TR-A01-IN
Junction Box For Turret Camera(Support Wiring From Behind)	Wall Mounting Plastic Bracket	NPT 3/4'' Waterproof Cable Gland
		
TR-SE24-A-IN	**TR-CM24-IN**	**TR-SE24-IN**
Dome Pendent Mounting Pole 500mm	Dome Pendent Mounting Bracket(Indoor)	Dome Pendent Mounting Pole 200mm
		

TR-JB07/WM03-G-IN-V2 Wall Mounting Assembling Bracket For Dome&Mini Dome&Plastic Turret Camera	**TR-WM03-D-IN-V2** Wall Mounting Bracket For Dome&Mini Dome&Plastic Turret Camera	**TR-UC08-C-V2** Bullet&Dome Corner Mounting Bracket
		
TR-UP06-C-IN-V2 Pole Mounting Bracket For Bullet Junction Box Only	**PWR-DC1201A-UK** DC12V/1A Wall Plug British Standard Power Adapter	**PWR-DC1201B-UK** DC12V/1A Wall Plug British Standard Power Adapter(Colorful Bag)
		
PWR-DC1201A-US DC12V/1A Wall Plug American Standard Power Adapter	**PWR-DC1201B-US** DC12V/1A Wall Plug American Standard Power Adapter(Colorful Bag)	**PWR-DC1201A-EU** DC12V/1A Wall Plug European Standard Power Adapter
		
PWR-DC1201B-EU DC12V/1A Wall Plug European Standard Power Adapter(Colorful Bag)	**PWR-DC1201A-IND** DC12V/1A Wall Plug Indian Standard Power Adapter-Colorful Bag	
		

Unlimited New View

Zhejiang Uniview Technologies Co., Ltd.

http://www.uniview.com

overseasbusiness@uniview.com; globalsupport@uniview.com

No. 369, Xietong Road, Xixing Sub-district, Binjiang District, Hangzhou City, 310051, Zhejiang Province, China

©2025-2026 Zhejiang Uniview Technologies Co., Ltd. All rights reserved.

*Product specifications and availability are subject to change without notice.

Despite our best efforts, technical or typographical errors may exist in this document. Uniview cannot be held responsible for any such errors and reserves the right to change the contents of this document without prior notice.