# 4MP Fixed Dual-light Turret NetWork Camera

# IPC3614SR-ADF28KMC-DL-H3

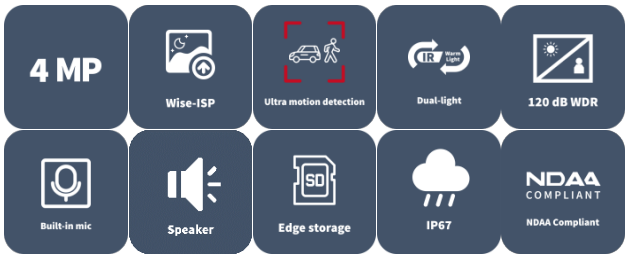


## Features

- High quality image with 4 MP, 1/3.0" CMOS sensor
- 4 MP (2560 × 1440)@25/20 fps; 3 MP (2304 × 1296)@30/25 fps; 1080P (1920 × 1080)@30/25 fps
- Ultra 265, H.265, H.264, MJPEG (Sub Stream Only)
- Wise-ISP technology ensures 24-hour full-color images
- Support ultra motion detection (human/ vehicle detection)
- 120 dB true WDR technology enables clear image in strong light scene
- Smart IR, up to 30 m (98.4 ft.) IR distance
- Warm light, up to 30 m (98.4 ft.) warm light distance
- Built-in mic and speaker
- Supports 9:16 corridor mode
- MicroSD, up to 512 GB
- Supports PoE power supply
- IP67 protection

# Specifications

| Model | IPC3614SR-ADF28KMC-DL-H3 |
|---|---|
| Camera | |
| Max Resolution | 4 MP |
| Sensor | 1/3.0" CMOS |
| Min. Illumination | Color: 0.002 Lux (F1.6, AGC ON), 0 Lux with light |
| Day/Night | IR-cut filter with auto switch (ICR) |
| Shutter | Auto/Manual, 1 to 1/100000 s |
| Adjustment Angle | Pan: 0° to 360°, Tilt: 0° to 75°, Rotate: 0° to 360° |
| S/N | > 52 dB |
| WDR | 120 dB |
| Lens | |
| Focal Length | 2.8 mm |
| Iris | F1.6 |
| Field of View (H) | 100.5 ° |
| Field of View (V) | 58.4 ° |
| Field of View (D) | 123.1 ° |
| Lens Type | Fixed |
| Iris Type | Fixed |
| DORI | |
| DORI Distance (Lens) | 2.8 mm |
| DORI Distance (Detect) | 42.0 m (137.8 ft.) |
| DORI Distance (Observe) | 21.0 m (68.9 ft.) |
| DORI Distance (Recognize) | 10.1 m (33.1 ft.) |
| DORI Distance (Identify) | 6.3 m (20.7 ft.) |
| Illuminator | |
| Illumination Distance (IR) | 30 m (98.4 ft.) |
| Illumination Distance (Warm Light) | 30 m (98.4 ft.) |
| Wavelength | 850 nm |
| Light On/Off Control | Auto/Manual |
| Supplemental Light | Dual light |
| Video | |
| Video Compression | Ultra 265, H.265, H.264, MJPEG (Sub Stream Only) |
| H.264 Code Profile | Baseline profile, Main profile, High profile |
| Frame Rate | Main Stream: 4 MP (2560 × 1440), max. 25 fps; 3 MP (2304 × 1296), max. 30 fps; 1080P (1920 × 1080), max. 30 fps; 720P (1280 × 720), max. 30 fps;<br>Sub Stream: 720P (1280 × 720), max. 30 fps; D1 (720 × 576), max. 30 fps; 640 × 360, max. 30 fps; 2CIF (704 × 288), max. 30 fps; CIF (352 × 288), max. 30 fps; |
| Video Bit Rate | 128 Kbps to 6144 Kbps |
| OSD | Up to 4 OSDs |
| Privacy Mask | Up to 4 areas |

| | |
|---|---|
| U-code | Support |
| ROI | Support |
| Video Stream | Dual streams |
| Snapshot | Support |
| Snapshot Resolution | 2560*1440; 2304*1296; 1920*1080; 1280*720; 720*576; 640*360; 704*288; 352*288 |
| Image | |
| White Balance | Auto, Outdoor, Fine tune, Sodium lamp, Locked, Auto2, Area white balance |
| Digital Noise Reduction | 2D/3D DNR |
| Smart IR | Support |
| Flip | Normal, Flip vertical, Flip horizontal, 180°, 90° Clockwise, 90° Anti-clockwise |
| HLC | Support |
| Dewarping | N/A |
| BLC | Support |
| Defog | Digital defog |
| Events | |
| Basic Detection | Motion detection, Ultra motion detection (human/ vehicle detection) , Tampering alarm, Audio detection |
| General Function | Watermark, IP address filtering, Access policy, ARP protection, RTSP authentication, User authentication, HTTP authentication |
| Audio | |
| Audio Compression | G.711U, G.711A, AAC-LC |
| Audio Bitrate | G.711U/G.711A: 64 kbps, AAC-LC: 128 kbps |
| Two-way Audio | Support |
| Suppression | Support |
| Sampling Rate | G.711U/G.711A: 8 kHz, AAC-LC: 8 kHz, 16 kHz, 48 kHz |
| Storage | |
| Edge Storage | MicroSD, up to 512 GB |
| Network Storage | ANR, NAS (NFS) |
| Network | |
| Protocols | IPv4, IPv6, IGMP, ICMP, ARP, TCP, UDP, DHCP, RTP, RTSP, RTCP, RTMP, DNS, DDNS, NTP, FTP, UPnP, HTTP, HTTPS, SMTP, SSL/TLS, SNMP, QoS, SSH |
| Compatible Integration | ONVIF (Profile S, Profile G, Profile T), API, SDK |
| Client | EZStation, APP |
| Web Browser | Plug-in required live view: IE 10+, Chrome 45+, Firefox 52+, Edge 79+, Plug-in free live view: Chrome 57+, Firefox 58+, Edge 16+ |
| Security | Password protection, Strong Password, HTTPS encryption, Export operation logs, Basic and Digest Authentication for RTSP, Digest Authentication for HTTP, TLS 1.2, WSSE and Digest Authentication for ONVIF |
| User/Host | Up to 32 users. 3 user levels: administrator, common user and operator |
| Interface | |
| Audio I/O | N/A |
| Alarm I/O | N/A |
| Serial Port | N/A |

| | |
|---|---|
| Built-in Mic | Support |
| Built-in Speaker | Support |
| Speaker Power Consumption | 2 W |
| WIFI | N/A |
| Network | 1 × RJ45 10 M/100 M Base-TX Ethernet |
| Video Output | N/A |
| Certification | |
| EMC | CE-EMC (EN 55032, EN 61000-3-3, EN IEC 61000-3-2, EN 50130-4)<br>FCC (FCC 47 CFR part15 B) |
| Safety | CE-LVD (EN 62368-1)<br>UL/CUL (UL 62368-1, CAN/CSA C22.2 No. 62368-1) |
| Protection | IP67 (IEC 60529) |
| Environment | CE-RoHS (2011/65/EU ; (EU) 2015/863) ; WEEE (2012/19/EU) |
| General | |
| Power | DC 12 V±25%, PoE (IEEE 802.3af) |
| Power Consumption | Max. 4.9 W |
| Power Interface | Ø5.5 mm coaxial power plug |
| Dimensions | Ø110.5 mm × 95.9 mm (Ø4.4" × 3.8") (Ø × H) |
| Weight | 0.47 kg (1.04 lb) |
| Working Environment | -30 ℃ to 60 ℃ (-22 ℉ to 140 ℉), Humidity: ≤ 95% RH (non-condensing) |
| Storage Environment | -30 ℃ to 60 ℃ (-22 ℉ to 140 ℉), Humidity: ≤ 95% RH (non-condensing) |
| Surge Protection | 4 KV |
| Reset Button | Support |
| Material | Metal |
| Web Client Language | 14 Languages: English, Simplified Chinese, Polish, German, Russian, French, Korean, Dutch, Czech, Portuguese, Spanish, Spanish (Europe), Italian, Turkish |

# Dimensions

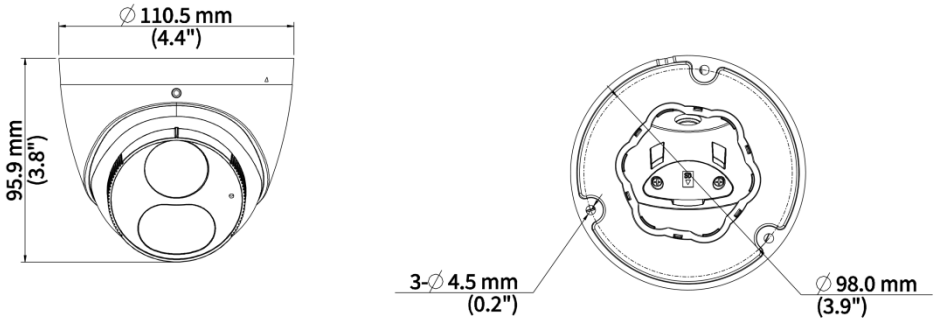


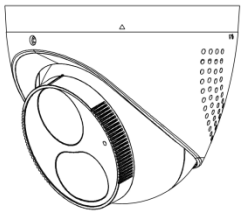

# Accessories

| TR-JB03-G-IN<br>Mini Dome Junction Box(Support Wiring From Behind) | TR-JB07/WM03-G-IN-V2<br>Wall Mounting Assembling Bracket For Dome&Mini Dome&Plastic Turret Camera | TR-WM03-D-IN-V2<br>Wall Mounting Bracket For Dome&Mini Dome&Plastic Turret Camera |
|---|---|---|
| | | |
| **TR-A01-IN**<br>NPT 3/4'' Waterproof Cable Gland | **TR-UP06-C-IN-V2**<br>Pole Mounting Bracket For Bullet Junction Box Only | **TR-UC08-C-V2**<br>Bullet&Dome Corner Mounting Bracket |
| | | |

| TR-SE24-IN | TR-SE24-A-IN | TR-CM24-IN |
|---|---|---|
| Dome Pendent Mounting Pole 200mm | Dome Pendent Mounting Pole 500mm | Dome Pendent Mounting Bracket(Indoor) |
| |  | |

# Unlimited New View

**Zhejiang Uniview Technologies Co., Ltd.**

http://www.uniview.com

overseasbusiness@uniview.com; globalsupport@uniview.com

No. 369, Xietong Road, Xixing Sub-district, Binjiang District, Hangzhou City, 310051, Zhejiang Province, China

©2026 Zhejiang Uniview Technologies Co., Ltd. All rights reserved.

*Product specifications and availability are subject to change without notice.

Despite our best efforts, technical or typographical errors may exist in this document. Uniview cannot be held responsible for any such errors and reserves the right to change the contents of this document without prior notice.